R&M STEEL COMPANY

INSTALLATION MANUAL

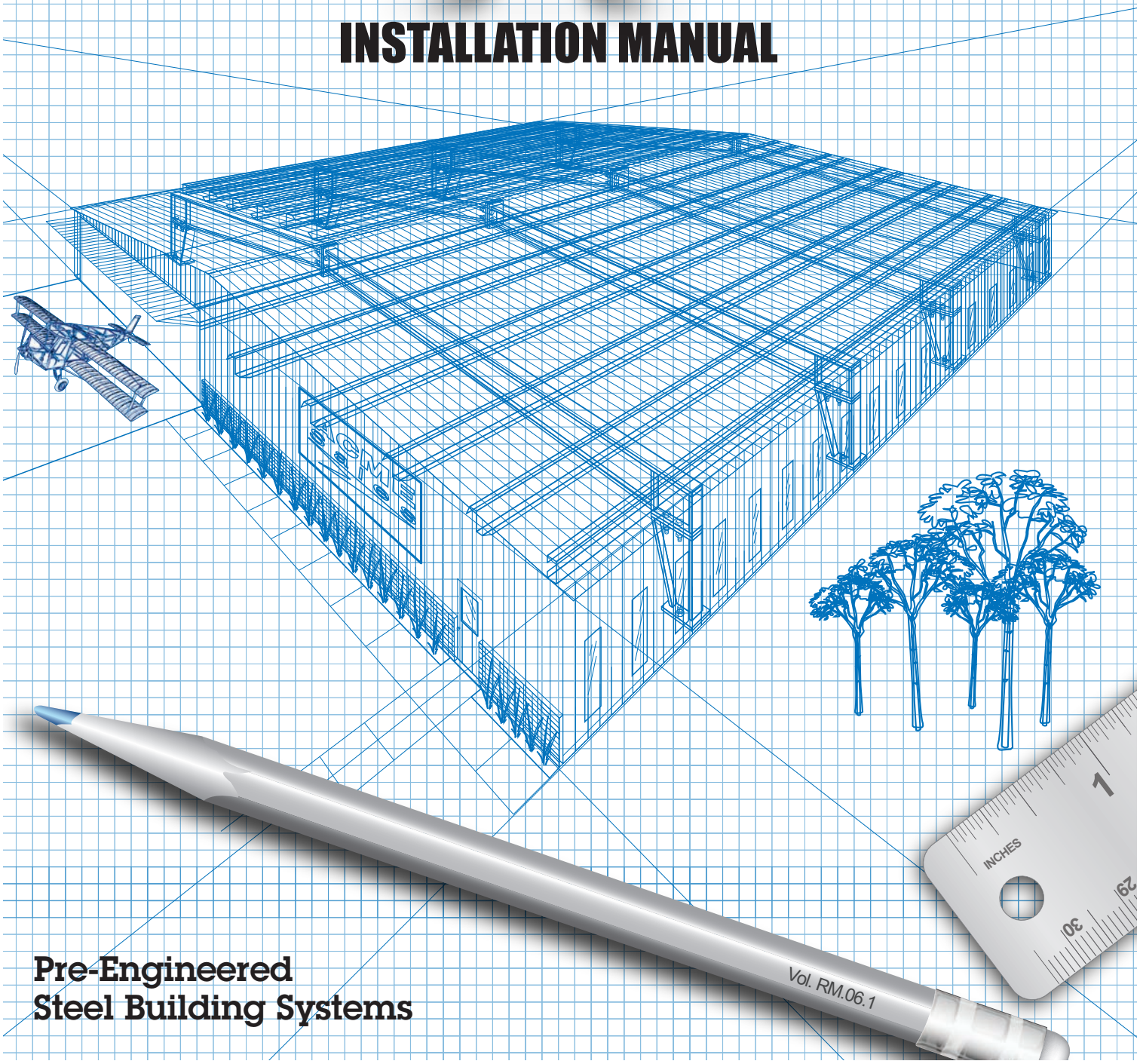

Pre-Engineered
Steel Building Systems

Index

Index

SERVICES

- **Complete "pre-engineered" metal building systems**
- **Custom designed exactly for your specific needs**
- **Normal delivery 2 to 4 weeks**
- **Metal building systems include**

  - ☐ Computer design
  - ☐ Certification by registered professional engineer
  - ☐ Drawings
  - ☐ Simplified erection design
  - ☐ Self framing 3070 personnel doors
  - ☐ Overhead doors (optional)
  - ☐ Insulation (optional)
  - ☐ Commercial 26 ga. tensile steel panels
  - ☐ 25 year paint guarantee on most sidewall applications
  - ☐ Elegant architectural shadow panels for wall applications
  - ☐ R&M steel building specifications upon request

R&M STEEL COMPANY

R & M STEEL COMPANY
P.O. Box 580
Caldwell, Idaho 83606
Phone: (208) 454-1800

Distributed By

INTRODUCTION...

It is the objective of R & M Steel to provide the highest quality, preengineered metal buildings possible. Every building is designed and fabricated to offer the strength and durability of steel coupled with low cost and ease of erection.

Every building leaves the factory with the highest quality of design and fabrication built in. However, these buildings become complete structures only after their erection on the site. This final phase is one of the most important of all in metal building construction.

This manual has been prepared to help guide the erection of our buildings. Although the procedures and methods set forth are basic in nature, they may be modified or adapted for use under a variety of special circumstances.

While numerous other erection practices may be employed, we believe those outlined in this manual will result in better quality, greater efficiency and lower cost.

At any time during erection of your building, feel free to contact your local representative or R & M Steel for advice or assistance.

Figure 1. Building Components

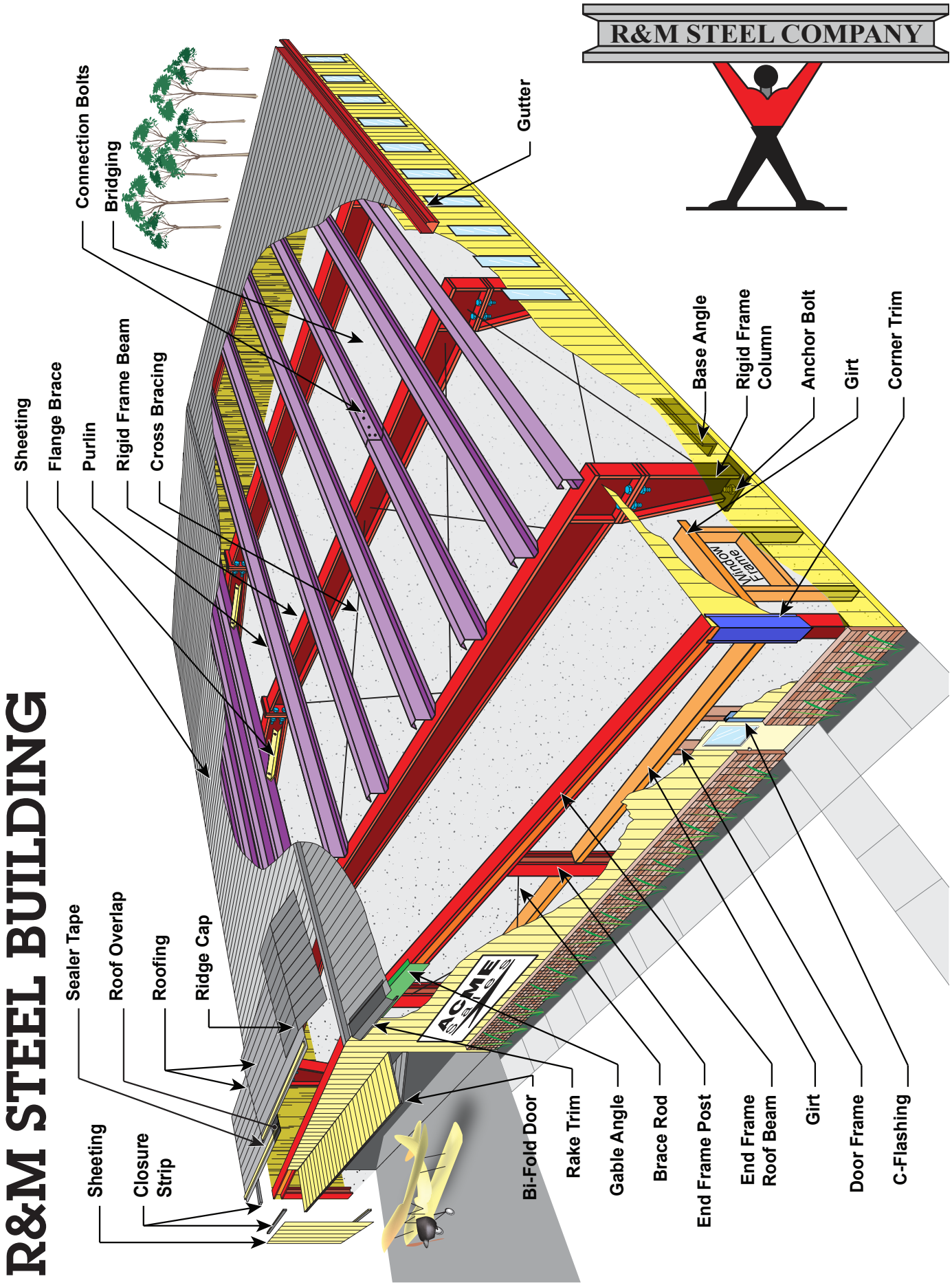

GENERAL CONDITIONS AND CONSIDERATIONS

The construction techniques in this manual have been successfully applied in field practice. They have been organized and presented to assist you in realizing **maximum efficiency and minimum cost** in erection. For those unfamiliar with metal building erection, it should be stated that all metal building erection progresses through four stages.

A. Primary framing.
B. Secondary framing.
C. Covering.
D. Accessories.

This manual will outline each successive stage and will provide the erector with simple, yet comprehensive information to aid in erection. We recognize that site conditions and other erection considerations may vary from the standards and instructions specified in this manual. In many cases alternative methods and shortcuts in erection are proposed. In some cases you or your contracted erector must rely upon your own experience and ingenuity in resolving situations or problems peculiar to your specific conditions or local building codes.

Safety

The buildings described in this manual are designed for commercial. industrial or farm use. Certain safety standards and regulations specified by OSHA (Occupational Safety and Health Act) may apply. Hazards to personal safety are present in any type of building construction and it is your responsibility to check and comply with local safety regulations applicable to your particular construction. Failure to do so could result in personal injury to yourself or others and penalties from authorities.

Equipment Required

Planning a building schedule and providing adequate and proper working tools and equipment will help insure an efficient, economical and safe job. This list of tools, equipment and materials is to be supplied by you or your contractor and is not necessarily all inclusive. It is not necessary to have every tool listed: however, erection time can be lengthened if you do not have the right tool.

In any event before beginning construction, be sure electrical power supply is nearby and that adequate extension cords of proper size and length are available and properly grounded during use.

Erection Sequence	Tools and Equipment Required
1. Foundation	Transit or level Steel measuring tape (100’)
a.Laying out	Stakes and twine
b.Excavation	Trenching tools and excavating equipment
c.Forming and pouring	Forming lumber with saw, hammer, nails & square (concrete reinforcing rods, mesh for foundation etc.)
2.Erecting structurals	Fork lift, crane or other hoisting equipment taglines, chains or cables with chokers, ladders or scaffolding, metal shims; washers, wood blocking and wrenches.
3.Sheeting, flashing, Trim, door, window and accessory installations	Electric drill and bits, screw gun or socket drivers, vise grips, and "C" clamps or sheet clamps, snips, nibblers or other metal cutters and pop rivit gun.

For a more extensive list of tools that may be useful see appendix I.

SECTION I
PRE-ERECTION PLANNING

Site Selection

The first and most logical step in the erection process is to choose a suitable site. Site selection will primarily depend on the buildings intended use. Certain elements in site selection should be considered.

1. **Access to site**— We will inform you of the arrival date of your building prior to shipment. Upon delivery the vehicle transporting tons of building parts must gain access to the building site. Access should be visualized and prepared for in advance. Unless a route of sufficient load bearing capacity exists the building will be delivered to the nearest accessible point.

   Permission should be obtained to travel over the owners property if no other access route is available. Even though such permission is thought unnecessary, the goodwill of the owner should be solicited and is generally assured when such permission is requested.

2. **Obstructions & Hazards**- Carefully inspect the building site and note overhead electric lines or other utilities which might be hazardous during load lifts. Also take note of any possible underground fixtures, conduit gas mains or underground cables which might prohibit foundation excavation.

3. **Work Area**— Insure sufficient room to physically perform the tasks necessary in erection. Application of sheeting and trim can be difficult or hazardous if sufficient working space is not available due to nearness of adjacent buildings or other obstructions.

4. **Availability of Power**— If the building site is not serviced with power, arrangements must be made for portable generators.

5. **Drainage**— The site should be as level as possible and possess good drainage. Working in mud makes erection difficult and water buildup after completion could result in damage to the building or the buildings contents.

6. **Site Maintenance**- Daily inspection of the structure and site after each construction day will prevent lost tools. Arrangements can be made to store and protect unused building parts.

Consideration of these basic site selection factors will simplify erection and insure a more satisfactory job.

Erection Drawings and Tally Sheets

We furnish a complete set of erection drawings with each building, It is recommended that the erectors familiarize themselves with all of the applicable drawings to properly plan the erection sequence.

Descriptions of standard erection drawings and tally sheets for our company are given below.

Anchor Bolt Plan

Anchor bolt plan drawings show the out to out dimensions of the foundations and the exact location and size of anchor bolts. Also shown are the layouts for doors. The foundation and anchor bolt plan is usually sent to the erector far in advance of the building shipment. This will provide sufficient lead time for accurate foundation planning and construction.

Typical Interior Section-The typical section shows the column and rafter arrangement, purlin, girt and flange brace locations, also bolt sizes and quantities.

Wall Framing Elevation - The wall framing elevation shows column and rafter arrangements and the location of girt clips. The wall sheeting elevation shows layout of wall panels, location and panel length, and the location of corner flashing, cap flashing, rake flashing and rake cap. Identifying part numbers are shown on all views.

Tally Sheets- In addition to drawings, tally sheets are furnished for each job. This is a bill of materials which lists every piece included in the shipment. Broken down into sections: Main structural frames, secondary framing, paneling or covering, accessories, etc.. this sheet will be a guide to unloading and inventorying the building shipment.

Building Components

This section identifies the basic components used in metal building construction. It will help you familiarize yourself with the various structural members and their location. Although the framing configurations may differ, structural components and their locations shown here are typical for all buildings.

Individual components are designed to serve a specific function and must be erected or installed at the locations shown and in the method specified in this manual.

For instruction purposes, drawings in this manual illustrate a 3-bay building. (See figure 1.)

SECTION II
FOUNDATION

General Information

Foundation design and construction is the single most important step in the building process. Whether the erector chooses to design and build his own foundation or contract it out, it must be noted that improper or inadequate foundation design will severely limit the building performance and could lead to costly repair or rebuild.

It is essential that the building foundation meet certain design assumptions and load conditions. For this reason, it is recommended that all building foundations be designed by a licensed professional engineer.

General Foundation Notes

Certain basic guidelines and considerations for foundation design are outlined on the foundation and anchor bolt drawing furnished by our company, However, **we assume no responsibility or liability for foundation floor or slab design**. Careful consideration of the following notes will be helpful in completing your foundation.

1. The foundation design should be done with due regard to the specific conditions present at the actual jobsite.

2. Foundations must be designed for the applicable reactions and must be adequate to resist all of the critical combinations for each of the various load conditions. Reactions are furnished by our company and can be found on your computer print out (C.P.O.). Foundation and anchor bolt drawings show the maximum reactions. (Figure 2 shows typical reaction drawings which represents the maximum design loads to be resisted by the foundation.)

   Figure 2. Frame Reactions

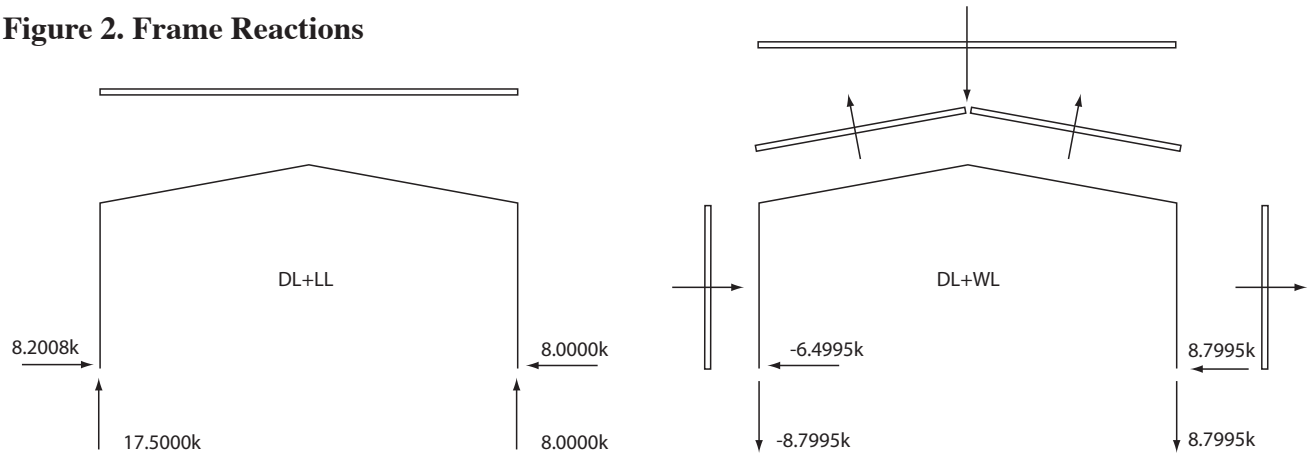

3. Reinforcing bars, wire mesh, anchor bolts, and/or hairpins (hook bars) should be incorporated as required into the foundation design. Column base horizontal thrusts, acting in conjunction with applicable vertical reactions, must be restrained by hairpins, tie rods, buttresses, or combinations of these or other dependable means.

4. Footings should extend a minimum of 6 inches into undisturbed soil: or where fill is used, the fill must be properly compacted and the footings shall extend down to undisturbed soil. In all cases, the footings shall extend at least 6 inches below the local frost line.

5. Expansion or construction joints shall be located in foundation walls and slabs midway between columns (never at columns).

6. The top of the foundations or floor shall be square, level, and smooth. Anchor bolts shall be accurately set to a tolerance of +— 1/16 inch on dimensions within the group spacing for an individual column. All other dimensions shall be within +—l/8 inch.

7. All anchor bolts shall be ASTM 307 or "better" in order to conform to our design assumptions.

8. Unless explicitly noted, all embedded structural steel (including anchor bolts), other materials, and labor shall not be supplied by our company.

Foundation Layout

There are several basic foundation designs adaptable to metal building construction. The type and configuration used will vary depending on the size and configuration of the building and the soil conditions present at the jobsite. Regardless of the specific configuration, your foundation outline should be carefully and accurately laid out before any excavation is made. Whenever possible, a transit or similar tool should be used to layout the foundation perimeter: this will insure accurate placement of corner measures and in turn, insure a square foundation.

However, the diagonal method of foundation layout is an easier and equally accurate method of foundation layout when properly utilized.

Diagonal Method (See figure 3.)

Figure 3. Setting Foundation Stakes

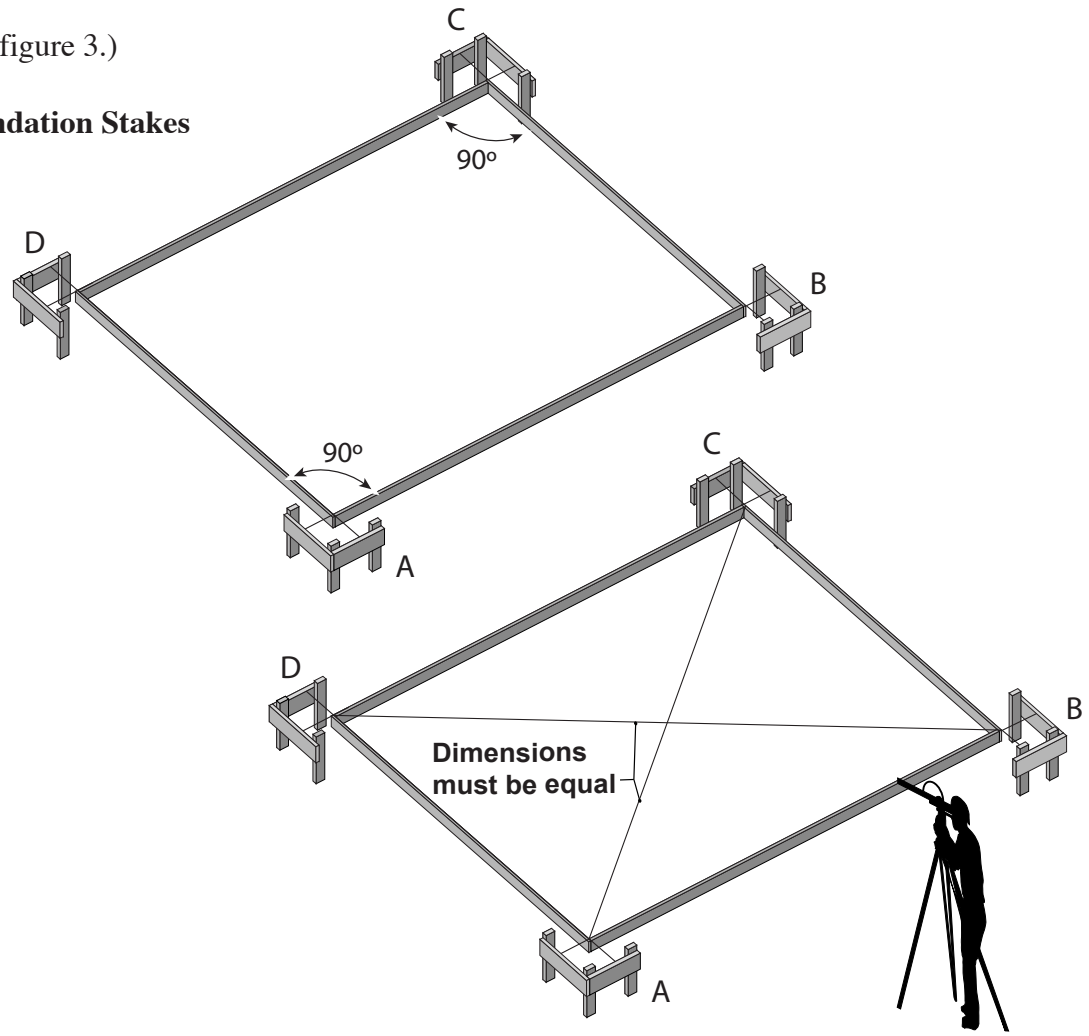

Step 1 Set up a stake for your first corner measure. (A)

Step 2 Measure off and set up second corner stake at dimension shown in your anchor bolt plan (B)

Step 3 The remaining corner stakes can then be placed at the dimensions specified (C & D).

Step 4 Secure lines of twine tautly between the corner stakes.

Step 5 By measuring the diagonal distances between the corner stakes the stakes can then be adjusted until the diagonals measure equal.

Step 6 When diagonals measure equal, your foundation has been laid out square along the outside edge of the foundation line of the building perimeter.

Foundation forms

Lumber of sufficient weight and thickness should be used in the construction of the forms. It is recommended that 1—1/2" form lumber be used whenever possible. Should a lighter grade of wood be used, insure that it is adequately reinforced at the perimeter to resist the outward pressure of the concrete.

Care should be taken to prevent cave—ins when utilizing the walls of the excavation for concrete forms. All areas within the formwork should be smooth and level. Where fill is used, insure that it is properly compacted.

Once excavation is complete, install rebars, vapor barrier and wire mesh as required.

Setting Anchor Bolts

It is extremely important that anchor bolts be placed accurately in accordance with anchor bolt setting plan. Before pouring concrete, become familiar with the following general notes describing size, type and positioning of anchor bolts.

Figure 4. Standard Anchor Bolts

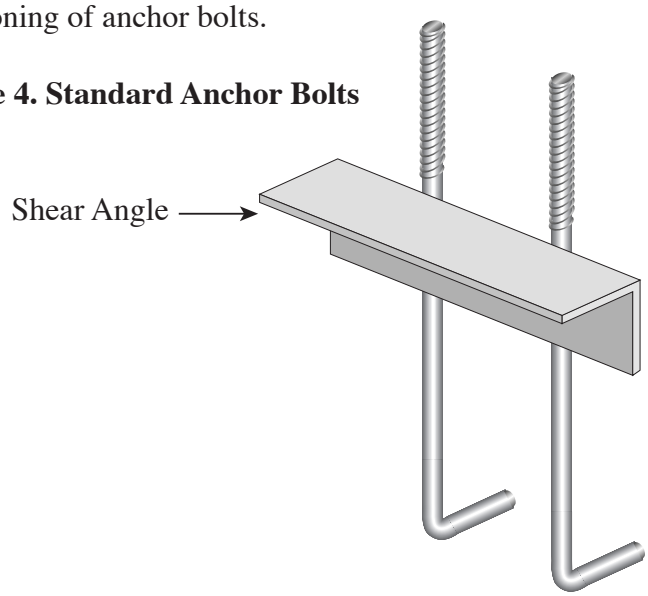

Notes

1. Anchor bolt diameter is found on computer print out (C.P.O.) and anchor bolt plan. Anchor bolt length is found on anchor bolt plan.
2. All anchor bolts shall be ASTM A307 or equal. Regular "J" or U-bolts may be used. However, care must be taken to insure proper anchor bolt spacing when fabricating U-bolts.
3. The threaded portion of the bolt should be a minimum of 2". Anchor bolts should project 2" minimum above surface of the concrete.

Setting Anchor Bolts (cont.)

4. All anchor bolts should be held in place with a template or similar means so that they will remain plumb during the pouring of the concrete. All templates should be prepared in advance so they can be quickly nailed in place as shown in figure 5. Be sure to clean machine oil from bolts shank before placing in template.

Figure 5. Anchor Bolt Template Plan

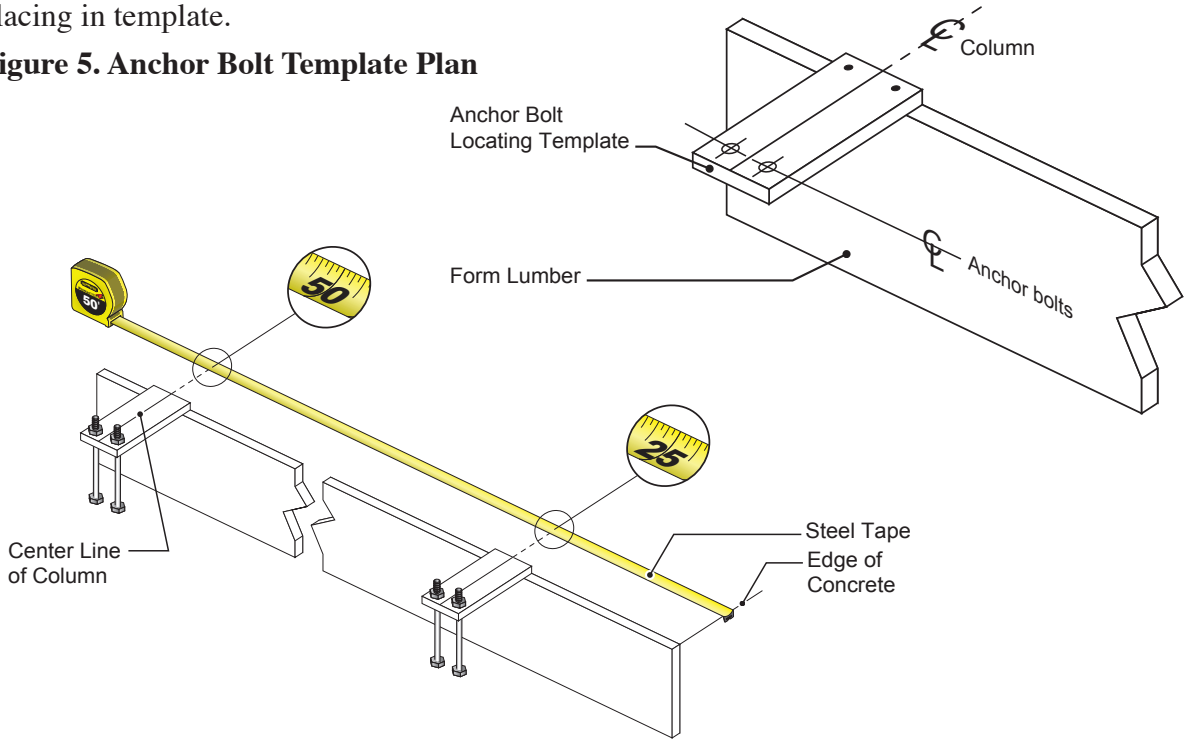

5. Templates are located and spaced at the centerline of columns or posts. Mark the centerline on the template and locate holes per foundation drawings.

Figure 6. Attach Template to Form

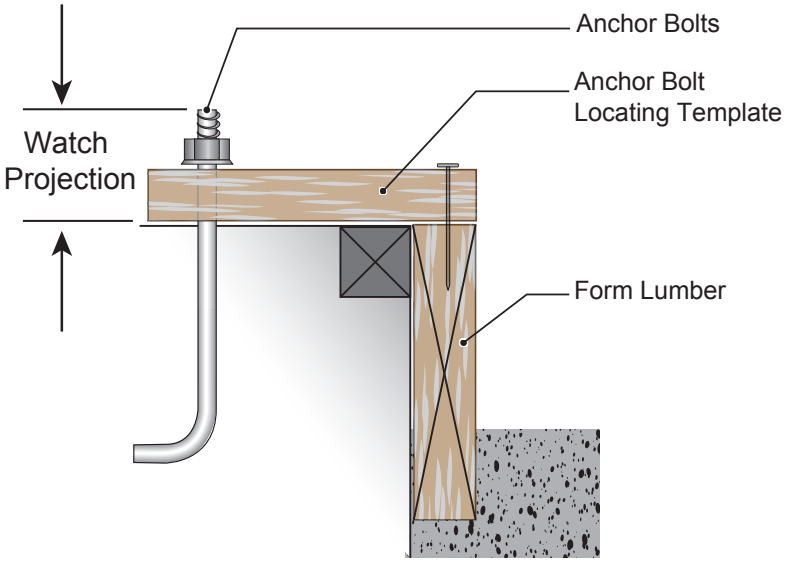

6. **Grease exposed thread to prevent concrete splatter from adhering to and fouling the threads of the anchor bolts. Check that each anchor bolt projects 2" from foundation surface.**

NOTE: Use 100' tape to locate dimensions to avoid accumulated errors which may occur if shorter tapes are used. Progressively add the distance between anchor bolts on form boards and mark so each anchor bolt dimension can be read directly on the tape. See figure 5.

Pour Concrete

Proper planning of the foundation construction will insure that a sufficient amount of concrete will be available at the specified time.

When pouring the concrete, make sure it is evenly distributed within the formwork. Level screeding of the concrete will insure a level foundation and prevent air pockets.

Care should be taken to obtain smooth finish and to maintain the correct elevation throughout the slab.

In no case should building erection be started on "green" concrete. As seen in figure 7. anchor bolts may pull loose, concrete may chip and equipment may crush or crack the slab.

Figure 7. "Green" Concrete

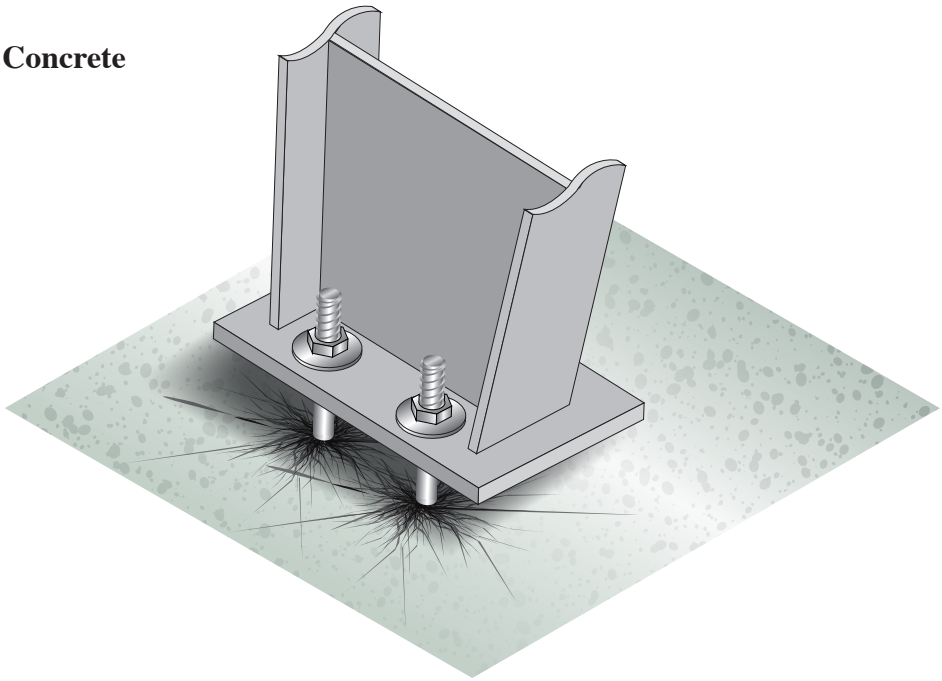

Normal portland cement should cure at least 7 days and high-early—strength concrete at least 3 days before attempting erection.

Do not pour concrete when temperatureis below 32 degrees fahrenheit unless provisions have been made to prevent concrete from freezing.

Final Inspection

After slab is complete and all forms have been removed, inspect the slab and anchor bolts. Again, make a final check to insure that all anchor bolts are placed correctly before attempting erection. After a reasonable "curing time" erection can begin.

SECTION III
UNLOADING OPERATIONS

General Information

The components in every building have been carefully inspected and loaded to insure safe and accurate delivery. However, **it is important for you to check and inspect the shipment when it is delivered.** Check each item against the shipping manifest. If there is a shortage or damage, have the driver make a notation on the bill of lading. If damage is not discovered until crating or packaging is removed, call your local representative.

Unloading

Wherever practical, your shipment should be unloaded so that the various components are spotted around your foundation near the. locations where they will be assembled and erected. The spotting diagram in figure 8 is typical and offers convenience and accessibility during erection.

Figure 8. Spot Unloading Layout

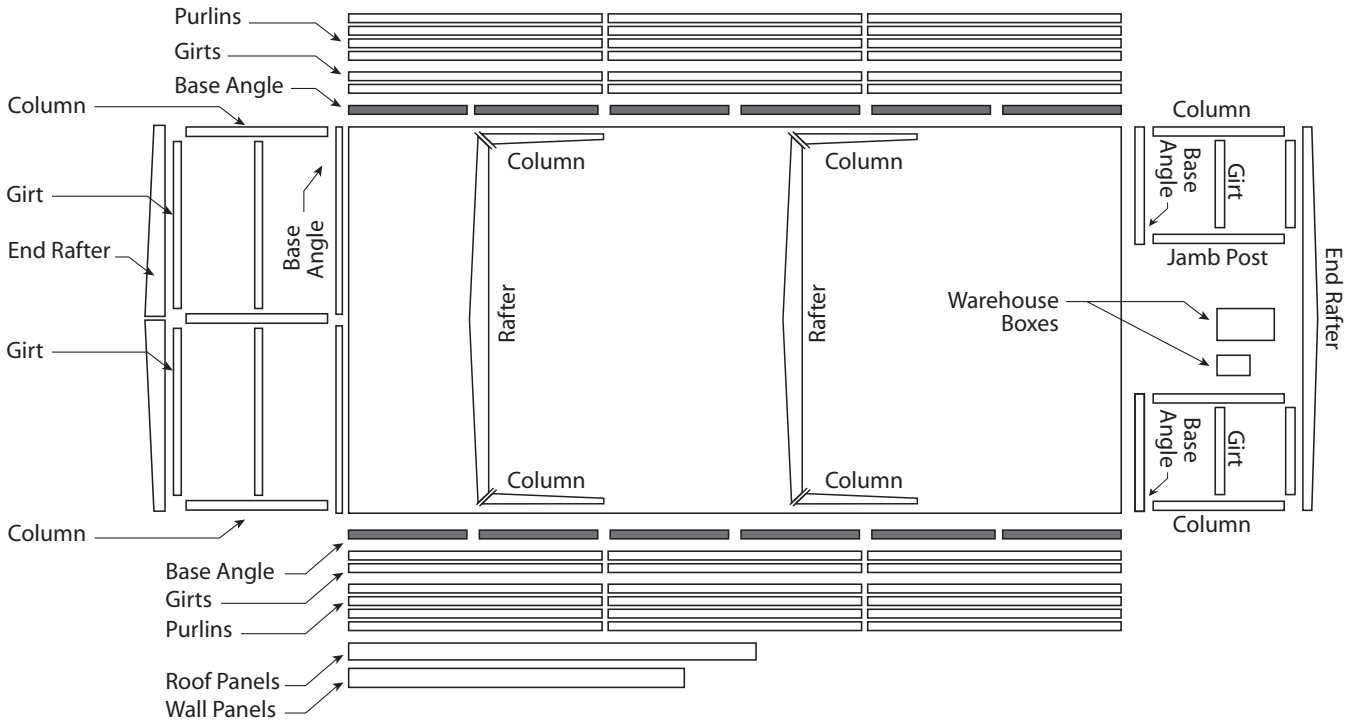

1. Hardware packages should be centrally located, usually along one side wall near the center of the building, to minimize walking distance to other parts of the slab area.
2. Purlins and girts, depending on the number of bundles, are unloaded near the sidewalls clear of other packages of parts.
3. Columns should be unloaded with their base plates near respective anchor bolts. Two men can usually raise short eave height endwall columns without equipment.
4. Rafters are usually unloaded on blocking on the slab. In this position ridge connections can be made easily.
5. Sheet packages should be unloaded along one or both sidewalls blocked and sloping to one end to facilitate drainage in case of rain.
6. Accessories are usually located in a corner of the slab or off the slab near one end of the building. Accessories will be the last step of installation and should be stored where they won't interfere with initial erection stages.

Blocking under the columns and rafters will protect the splice plates and the slab from damage during unloading. It also facilitates the placing of slings or cables around the members for later lifting and allows them to be bolted together into sub-assemblies while on the ground. Extra care should always be exercised during unloading to prevent damage to materials or the concrete slab.

Storage Protection

As previously emphasized, a great amount of time and trouble can be saved if the building parts are unloaded according to a pre-arranged plan. Proper location and handling will eliminate unnecessary handling and damage.

If immediate erection is not possible, follow these precautions to protect components from damage and weather.

1. Place beams, columns and bundled panels on wood planking so metal surfaces do not touch the ground. To prevent rust spotting, position members and panels with one end approximately one foot higher than the other to facilitate water runoff. Columns and beams should be laid on edge.
2. **When stored for extended periods, metal sheets should be stored inside.** When storing outside, provide cover of polyethylene film or other waterproof material. Do not seal waterproof material tightly as condensation may occur. Be sure to position one end of sheets higher than the other for drainage.
3. If bundled panels should get wet, they must be separated to permit drying. Place sheets on edge and space approximately one inch. To prevent the accumulation of "white rust" on galvanized sheets, wipe the wet areas with a coarse cloth (such as a burlap) and then wipe on a coat of light oil or kerosene.

When handling or uncrating the panels, lift, rather than slide, them apart. Burred edges may scratch the coated surfaces when sheets are slid over one another. Never allow panels to be walked on while on the ground.

SECTION IV
FRAME ERECTION
PRIMARY AND SECONDARY STRUCTURAL

General Information

Many methods and procedures are in use for erecting the structural portion of metal buildings. For example, the techniques of raising frames vary all the way from erecting small spans and endwall frames in units, to erecting the frames piece by piece. The erection methods used depend strictly on the type of building, the available equipment, the experience level of the crew and individual job conditions.,

The variations in these factors preclude the establishment of a firm or specific set of erection rules and procedures. Consequently, the erection operation must be tailored by the erector to fit individual conditions and requirements.

Review of the considerations covered here will help you in planning for the fastest, most efficient job of assembly. In some cases, alternative methods must be used and should be substituted at the erector's discretion.

Identification of Structural Components

The components identified in figure 1 are typical of those included in most metal buildings. Building configuration and size will vary. The primary structural components will consist, according to your specifications, of the following.

1. Interior (intermediate) Tapered Beam Rigid Frames
2. Interior (intermediate) Modular Rigid Frames
3. Expandable Endwall Tapered Beam Rigid Frames
4. Expandable Endwall Modular Rigid Frames
5. Non-Expandable Endwall Tapered Beam Rigid Frames
6. Non—Expandable Endwall Modular Rigid Frames
7. Post and Beam Endwails (Hot rolled wide flange)
8. Portal Frames (Built up or wide flange)
9. Wind columns (Built up or wide flange)
10 .X-bracing
11. Flange braces
12. Bridging (Sag angle)

As stated before, we furnish a complete set of erection drawings with each building. Individual building components are piece marked to coincide with the piece mark shown on these drawings. By carefully following the details shown on your erection drawings and in this manual, each component can be easily identified and properly assembled.

Assembly and Erection Methods

Several alternative methods may be used to erect the primary framing in your metal building. Again it is up to the erector to choose the method best suited to his particular needs.

Basic Framing Sequence

A general sequence of frame erection is as follows:

1. Begin with the X—braced bay closest to an endwall. Refer to your erection drawings to find X-braced bays.

Figure 9. Erecting First Bay

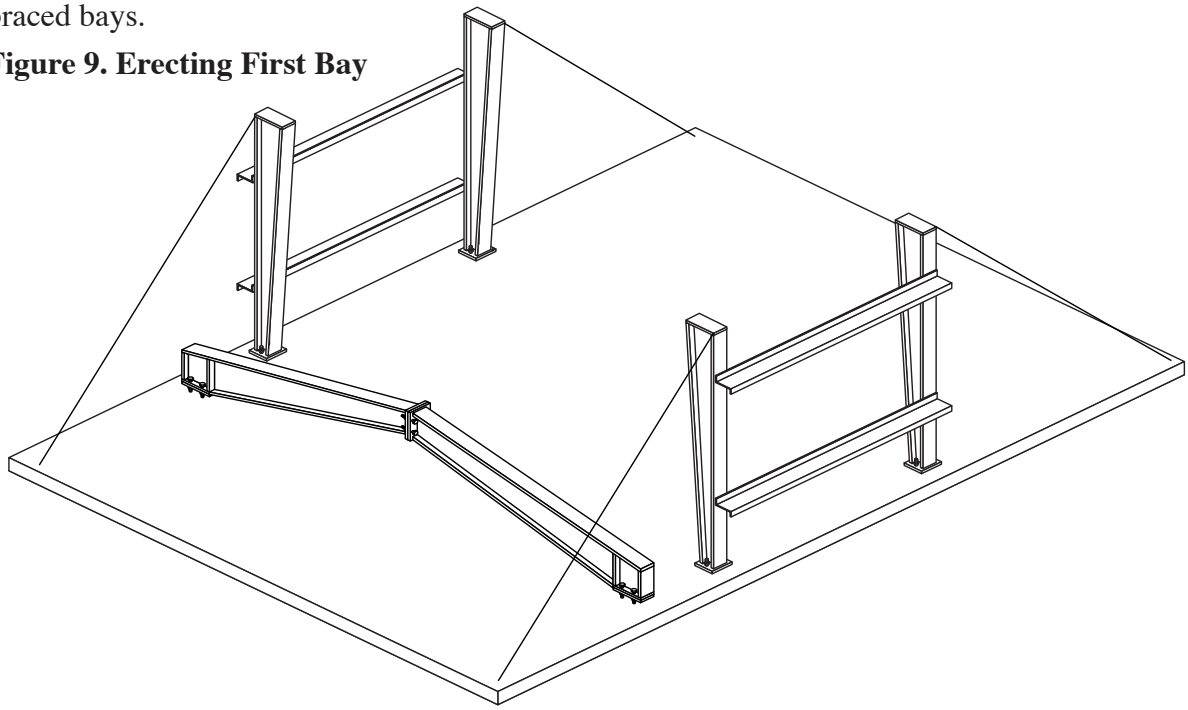

2. Roof and wall braces should be installed for strength and safety.
3. Plumb and square the X—braced bay.

Figure 10. Complete First Bay

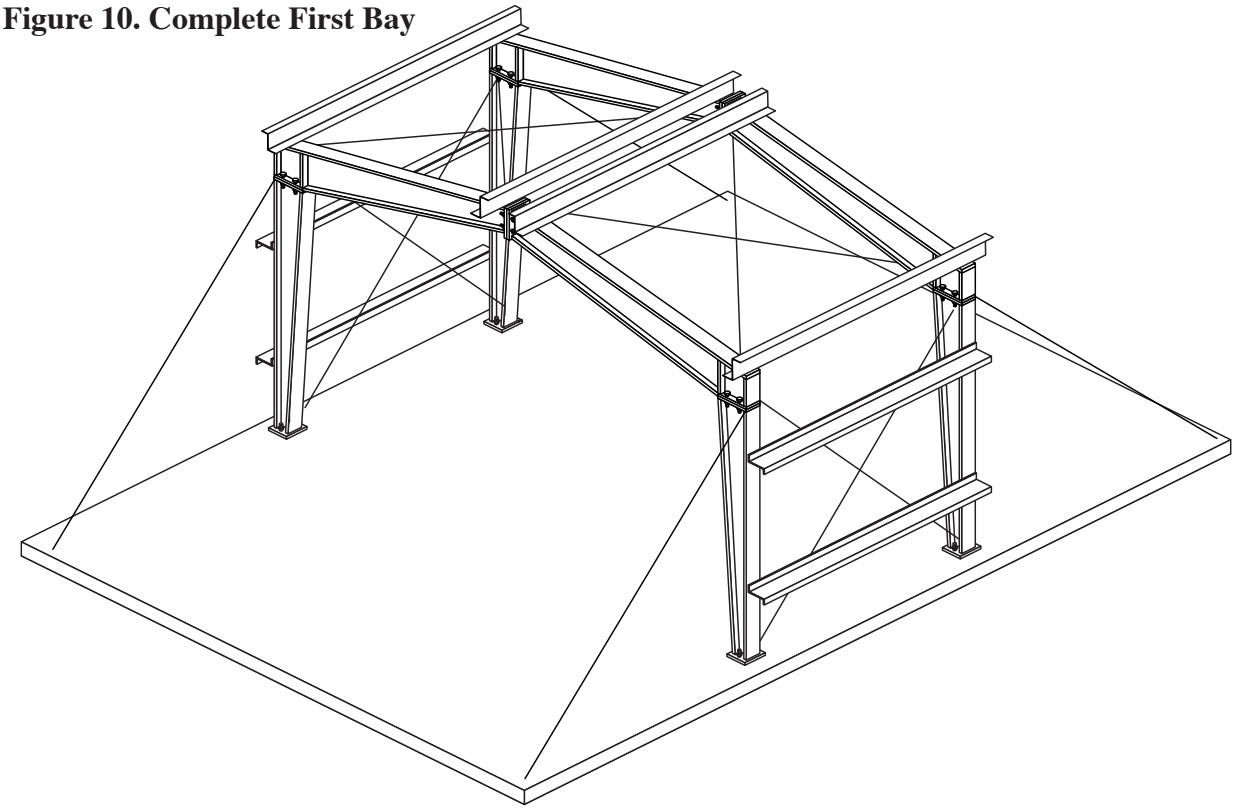

4. The interior bay adjacent to the X-braced bay should be framed next.
5. Continue erecting adjacent frames working toward the nearest endwall.
6. Erect and support the end frame nearest to the erected interior framing.

Figure 11. Complete Endwall

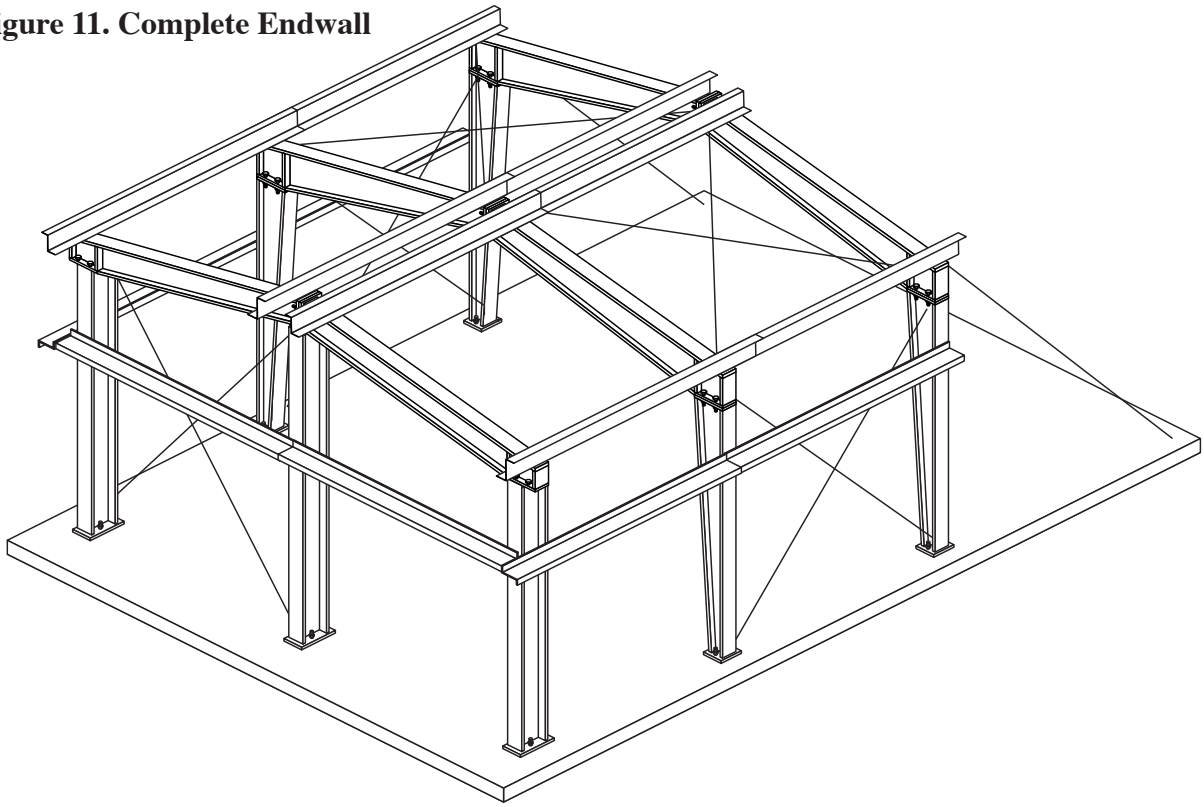

7. Continue the erection sequence working toward the uncompleted endwall. Make sure roof and wall braces are installed and each X-braced bay is plumb and square before erecting succeeding bays. Continue until the primary and secondary framing is completed.

Figure 12. Completed Building

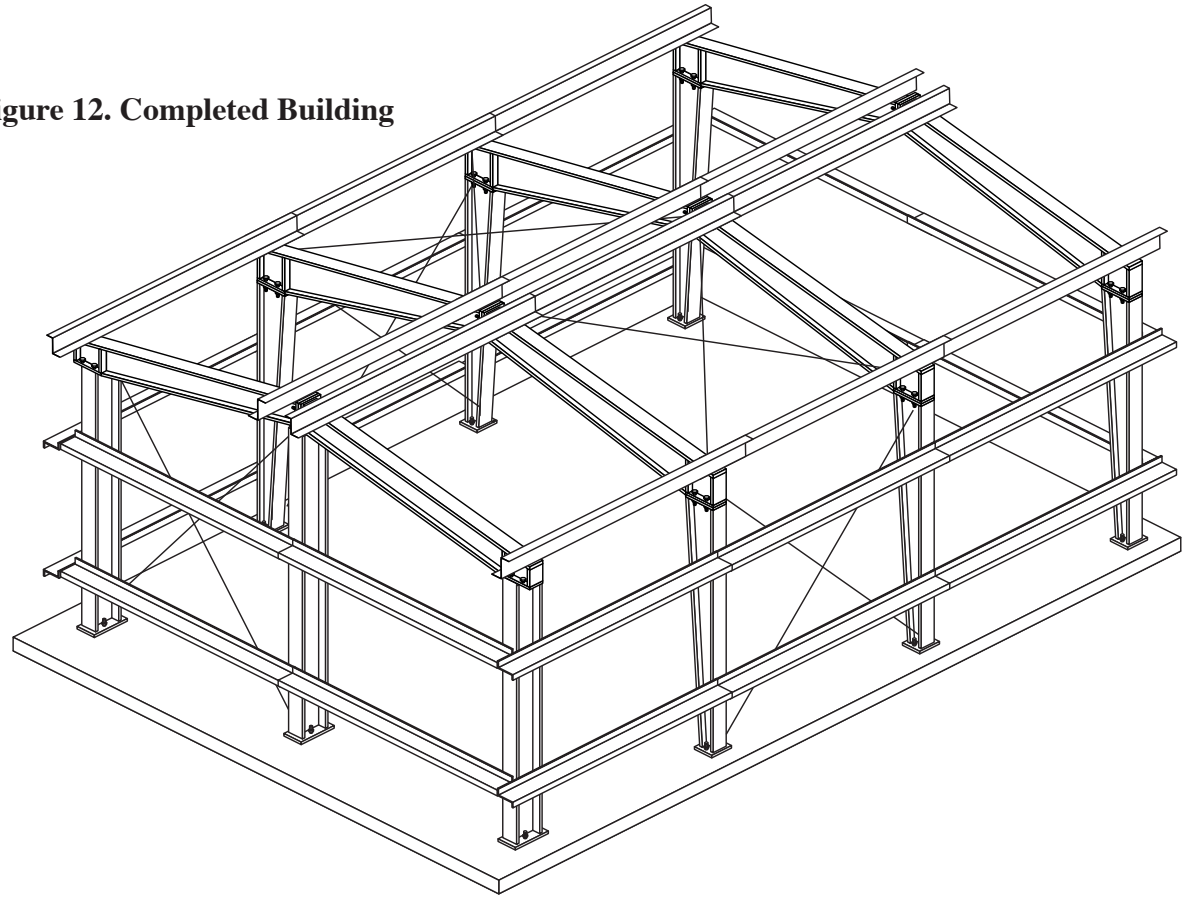

Structural Erection Procedure

Step 1 Locate the interior X—braced bay nearest an endwall.
Place interior frame columns at both ends of this bay at appropriate anchor bolt locations. Bolt flange braces to columns and rafters before they are erected. Column and rafter flange braces are to be attached to flange brace clips (which are welded to column or rafter) and the corresponding purlin or girt by means of a 1/2" A325 bolt.

Note: Flange braces are used to provide lateral Support to the member and their **installation is CRITICAL for the structural integrity of the building.**

Step 2 Clean any dirt from the top of the foundation so the base of the columns will rest flush on the foundation. Stand columns on the anchor bolts and secure in place with nuts and washers. Columns must rest flush on foundation and be level. Attach girts to the column at girt clip locations with 1/2" bolts. Attach flange braces to girts. Check erection drawings for special conditions.

Figure 13. Flange Brace Detail

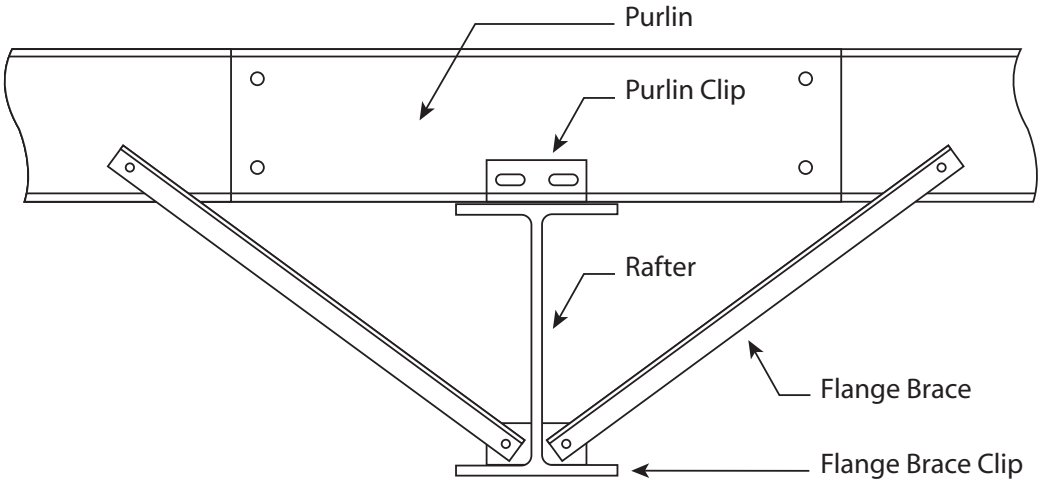

Note: Temporary bracing may be required for loads the structure is subjected to while erection is in progress. The amount of temporary bracing required shall be determined by the erector. This bracing must remain in place as long as it is required for safety.

Step 3 Lay out rafters according to framing plan. Clear span rafters of two or more sections may be bolted together before hoisting. If rafters are to be bolted prior to hoisting block up to facilitate assembly and enable other parts to be attached. Butt rafter sections together, with a fork lift or crane then raise end plates until they come together, align the holes then draw the bolts up evenly.

Note: All rigid frame and endwall frame, steel to steel connections are to be field bolted connections using A325 bolts, the size of which is shown on the drawings provided with the building. Bolts shall be tightened, in properly aligned holes, by the turn-of-nut method as follows.

Structural Erection Procedure (cont.)

Turn of Nut Method

To provide the proper bolt tension, there shall first be enough bolts brought to a "snug tight" condition to insure that the parts of the joint are brought into good contact with each other. Snug tight is defined as the tightness attained by a few impacts of an impact wrench or the full effort of a man using an ordinary spud wrench. Following this initial operation, bolts shall be placed in any remaining holes in the connection and brought to snug tightness. All bolts in the connection shall then be tightened additionally by the applicable amount of nut rotation specified in table 1. Tighten progressing systematically from the most rigid part of the joint to its free edges. During this operation there shall be no rotation of the part not turned by the wrench.

Table 1, Fastener Tension

Bolt Length (as measured from underside of head to extreme end of point)	Disposition of Outer Faces of Bolted Parts		
	Both faces normal to bolt axis	One face normal to bolt axis and other face sloped not more than 1:20 (bevel washer not used)	Both faces sloped not more than 1:20 from normal to bolt axis (bevel washers not used)
Up to and including 4 diameters	1/3 turn	1/2 turn	2/3 turn
Over 4 diameters but not exceeding 8 diameters	1/2 turn	2/3 turn	5/6 turn
Over 8 diameters but not exceeding 12 diameters[b]	2/3 turn	5/6 turn	1 turn

[a] Nut rotation is relative to bolt, regardless of the element of the element (nut or bolt) being turned. For bolts installed by 1/2 turn and less, the tolerance should be plus or minus 45º.

[b] No research work has been performed by the Council to establish the turn-of-the nut procedure when bolt lengths excced 12 diameters. Therefore, the required rotation must be determined by actual tests in a suitable tension device simulaiting the acutal conditions

Step 4 Assemble your second rafter. Hoist rafter into place. Tie the two frames together by installing purlins and flange braces.

Note: Initially Tighten purlin and girt bolts hand tight.

Cable Bracing

The first bay must be perfectly aligned (plumb and square) before proceeding with erection of other bays or endwall structurals. Cable braces are provided with each building and serve two purposes. They are useful in plumbing and aligning the frame work, and they provide structural support. Cable braces should always be installed as shown on the erection drawings.

Our Company provides cable precut to the lengths required. Check the materials list and Erection Drawings for proper locations. Attach Brace grips through the eyebolts and to the cable ends. Attach eyebolts through the holes in the column webs to the rafter webs (forming a "X" shape) using a hillside washer, washer and nut respectively. Plumb and square each braced bay before proceeding with the remainder of the structure.

Figure 14. Cable Assembly

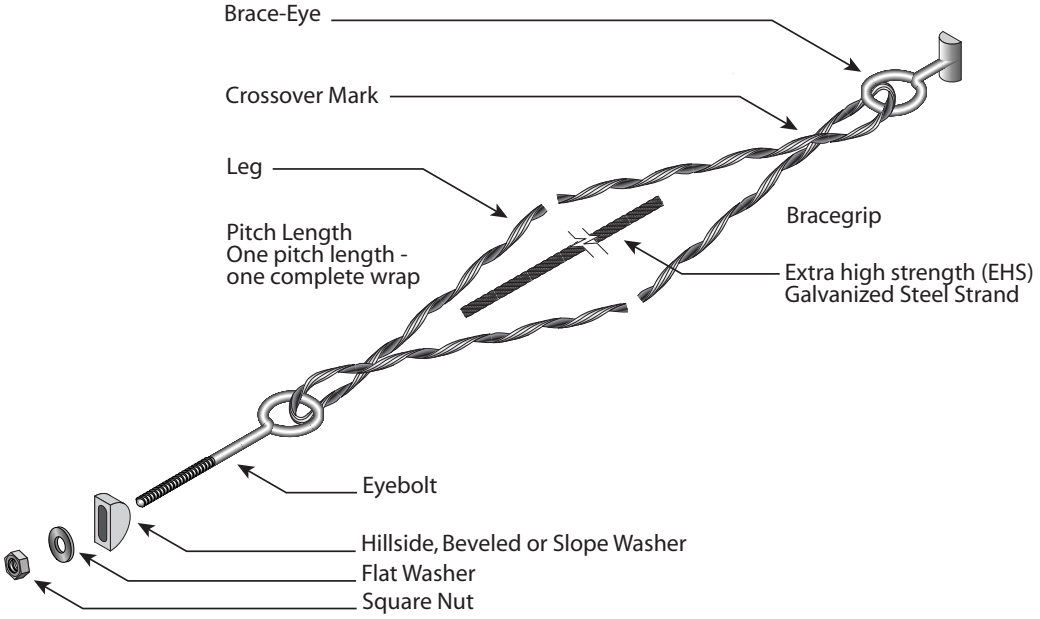

Brace grip application

Step 1. Insert one leg through the eyebolt. Apply thumb pressure to hold the end of the strand at the crossover mark.

Figure 15

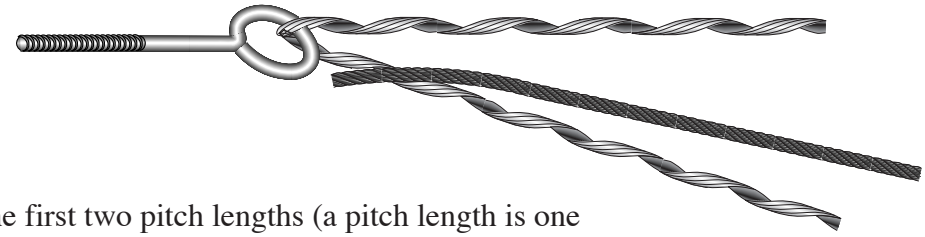

Step 2. Apply the first two pitch lengths (a pitch length is one complete wrap around the strand—see figure 14) to the strand.
NOTE: From this point on, the leg may be rotated out and away from the strand, making the application easier. Apply one more pitch length as shown.

Figure 16

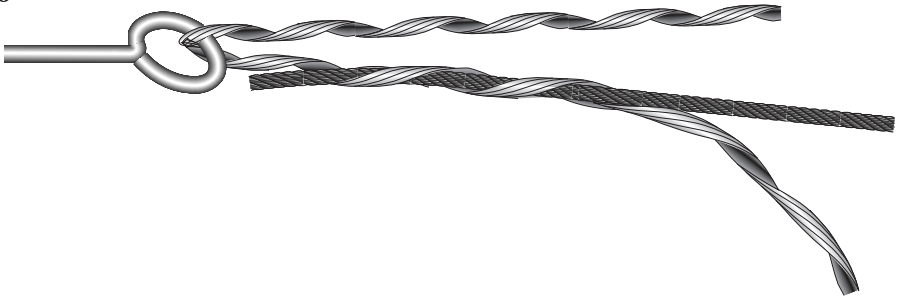

Brace grip application (cont.)

Step 3. Match the crossover marks and apply other leg...

Figure 17

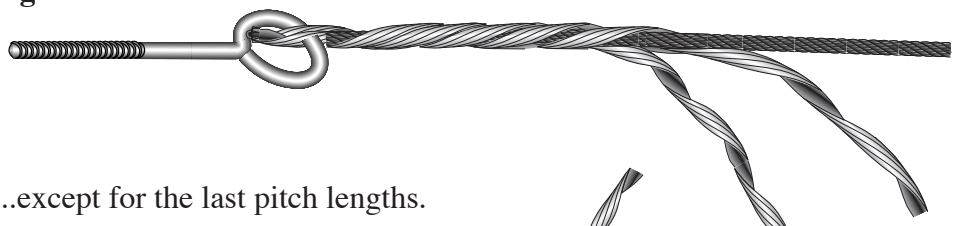

Step 4. ...except for the last pitch lengths.

Figure 18

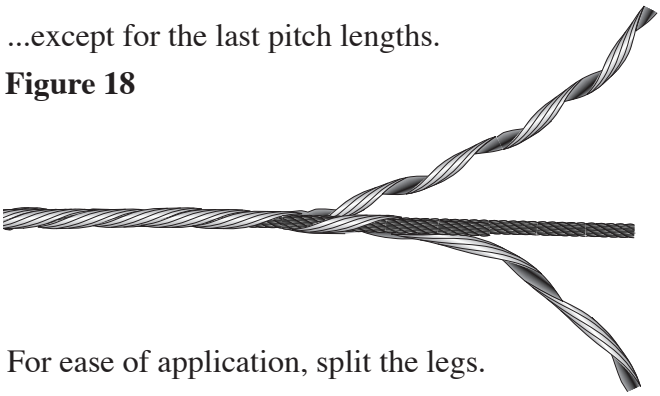

Step 5. For ease of application, split the legs.

Figure 19

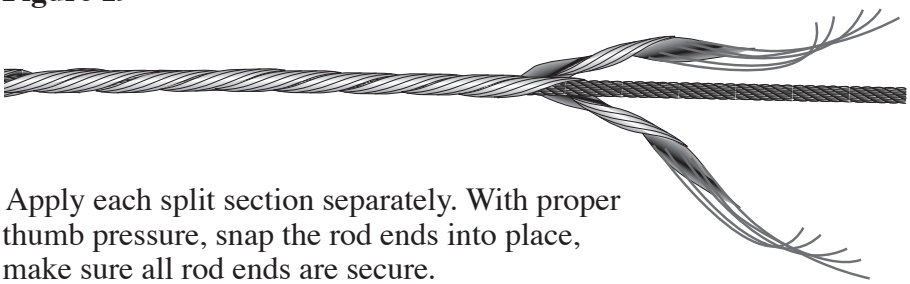

Step 6. Apply each split section separately. With proper thumb pressure, snap the rod ends into place, make sure all rod ends are secure.

Figure 20

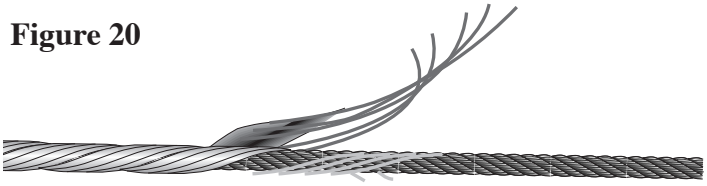

Step 7. The Brace—Grip completely applied to strand and eyebolt.

Figure 21

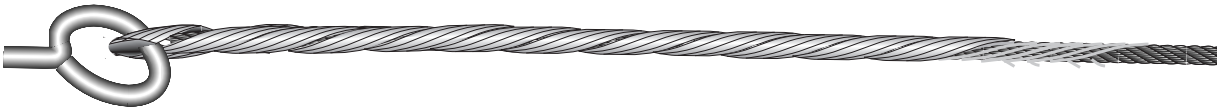

Step 8. Insert the shaft of the eyebolt through the hole in the web plate of the beam. Apply a hillside washer to the protruding end of the bolt. Next apply a washer and a nut.

Figure 22

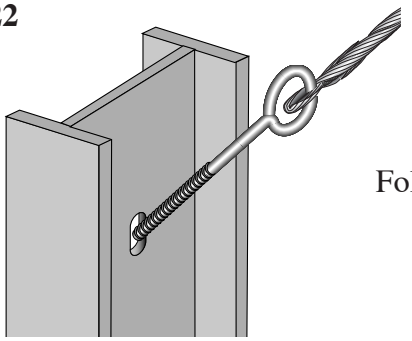

Follow this same procedure for the other eyebolt...

Plumb and Square Bay

Step 1. First attach Eyebolt to Brace grip then attach brace grip to cable. See figures 13-20.

Step 2. Insert shaft of eyebolt through the pre-cut hole in the columns. Apply the beveled hillside washer to the protruding end of the bolt followed by a washer and a nut. See Figure 23.

Figure 23. Cable Assembly

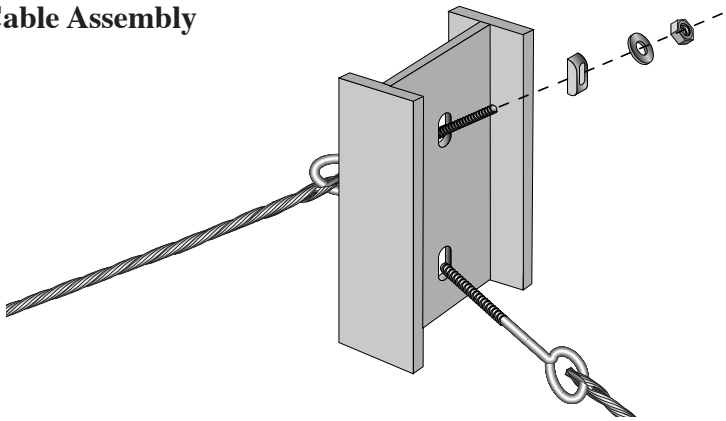

Step 3. Install roof bracing cables in the same manner, but do not tighten the nuts.

Step 4. With all bracing installed plumb the columns using a carpenters spirit level. Make plumb adjustments by loosening or tightening the nuts on the sidewall brace cables.

Step 5. Now measure the distance from the upper corner of the braced bay to the lower corner of the opposite. When the distance is the same between both opposite corners, the columns will be plumb and square.

Step 6. Alignment of the roof beams can be checked by attaching a string to the base of the columns center on the width of the column base. A plumb bob is then dropped from the center of the rafter at the ridge of the building and tied off a few inches from the floor.

Figure 24. Checking the Rafter for Plumb

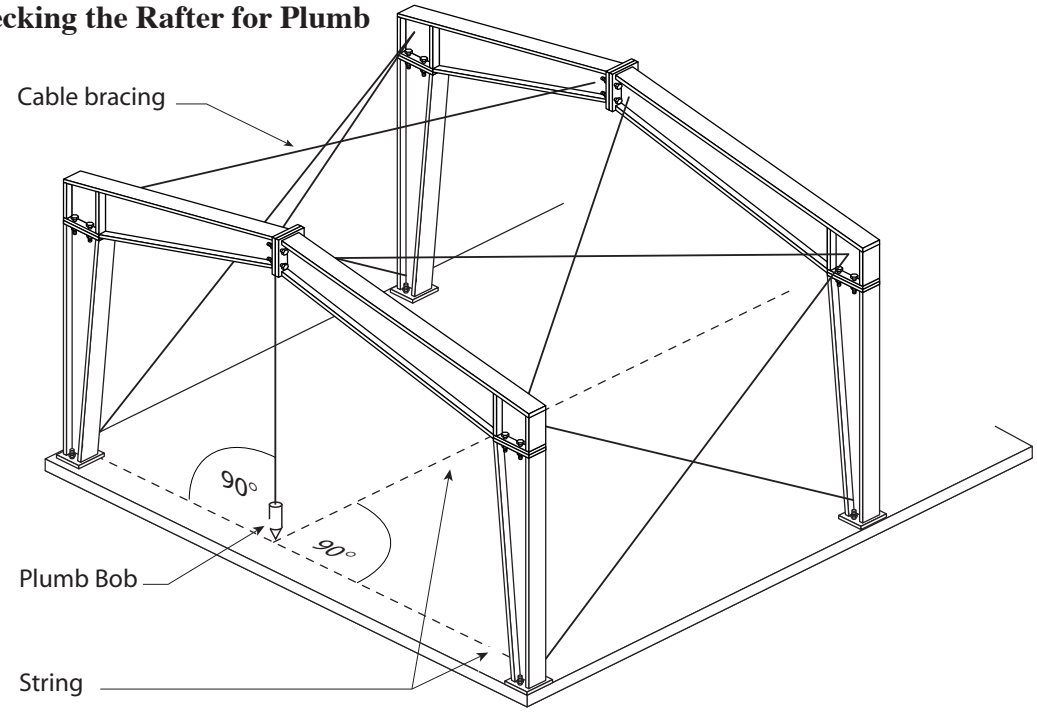

The roof bracing cables can then be adjusted to bring the plumb bob directly over the string line indicating the roof rafters are aligned. See Figure 23.

Step 7. Proceed with the erection of intermediate Frames working toward the nearest endwall.

ENDWALL

General Information

After the framing of interior bays has reached an endwall and the braced bay(s) plumbed, the building frame should resemble figure 10.
After double—checking the bay alignment, erect endwalls as framing reaches them.

Endwall Configurations

There are many different endwall configurations. each designed for the specific conditions under which it will perform. Again, become familiar with the erection drawings depicting your building. Each part will be clearly marked to aid you in assembly.

End Frames

End frame components should first be laid out on blocking in their appropriate endwall position. End post, corner post and end frame beams may be hot rolled or built up sections. In some cases the post may serve as door jamb. Connect the rafter beam to the columns and attach flange braces, if required (see Erection Drawings for specific details).

The end frame is now ready to be lifted into position. Large width buildings may require that additional column and beam connections be made after an initial section of the end frame has been set in place and secured.

Raise the pre—assembled end frame into place and secure columns to the anchor bolts. The end bay can be stabilized by connecting all secondary framing from the braced bay to the end frame. Once the endwall framing has been secured, the lifting equipment can then be released. Square and plumb endwall.

Endpost Connection to Rigid Frame Endwall

The customer may require a rigid frame end wall for future expansion. See the erection drawings for the rigid frame to be placed in the endwall position and additional posts to be used in the completion of the endwall framing.

Rake Angle

The rake angle attaches to the top of the purlins at the endwall frame and is used to attach the endwall sheeting. If the building has an overhang, the rake angle must be field notched to fit over the purlins and installed at the endwall steel line. (See Erection Drawings for details.) Attach the rake angle to each purlin with an overlap of 1" at each splice. Screw together at purlins and splices using a #12x1" galvanized Tek screw.

Figure 25. Rake Angle Detail

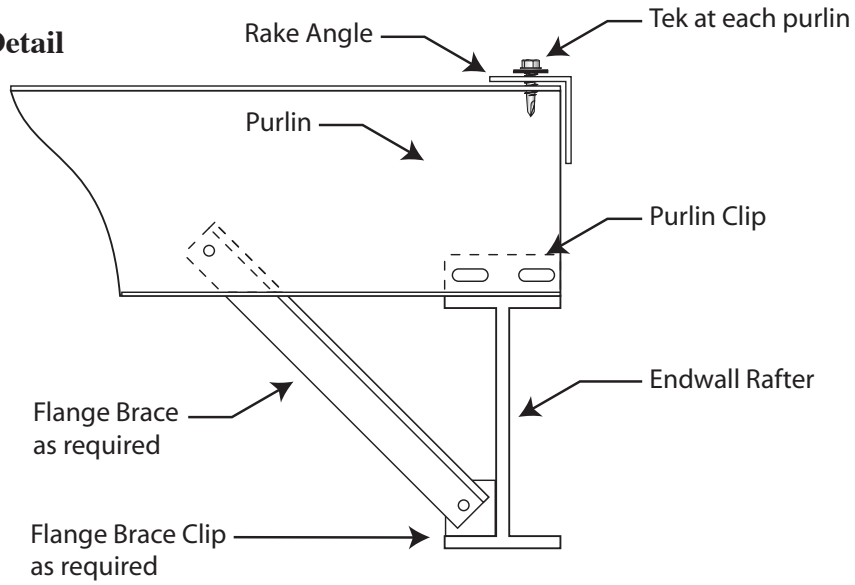

SAG ANGLES (BRIDGING)

Sag angles are required to prevent rolling of the purlins. First Block Purlins at proper spacing. Then starting at the ridge working your way towards the building eave place each sag angle at the lower flange of the purlin. Attach the sag angle to each purlin using a #12x1" galvanized Tek screw. Sag angle is lapped 1" w/ 2 TEKS. Sag angle is continuous from eave to opposite eave. Use same procedure at wall girts.

Figure 26. Bridging Detail

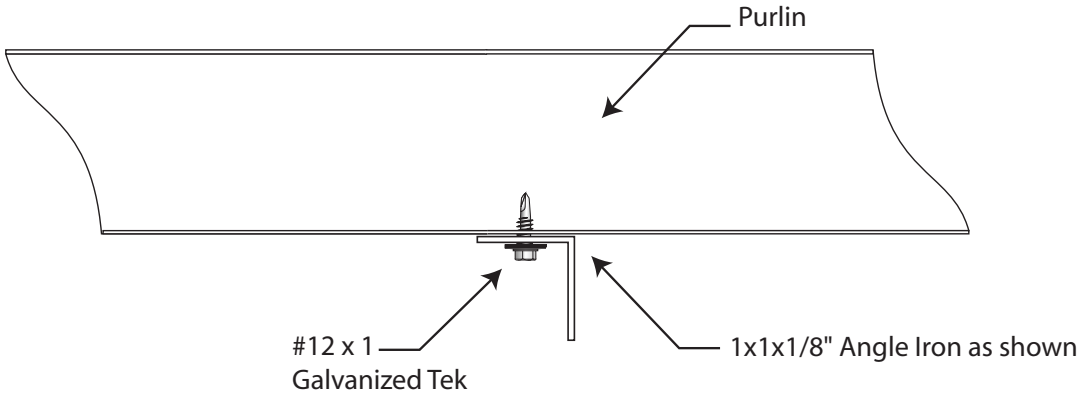

EAVE STRUT

Eave struts are Cee sections whose height matches the roof purlins with equal flanges and a stiffening lip. Attach eave struts with 1/2" bolts.

Figure 27. Eave Strut Detail

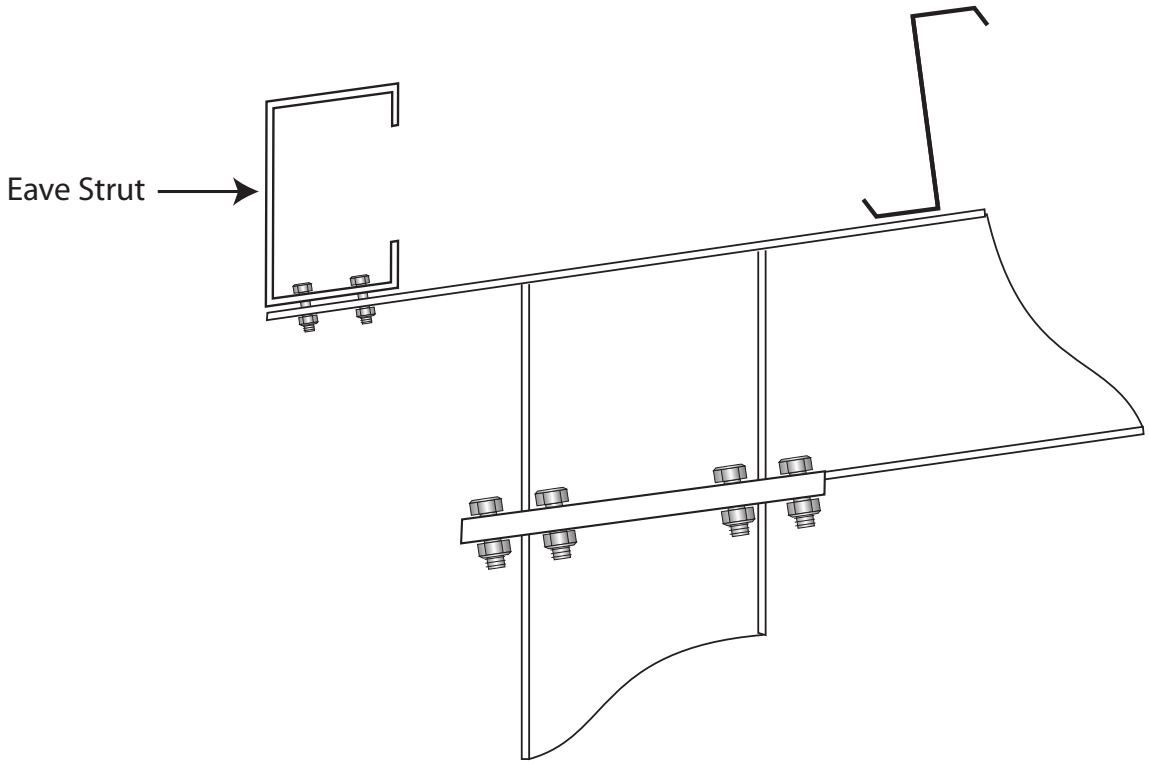

FRAMED OPENINGS

Lay out the required substructural members to be used to frame an opening. Check the anchor bolt dimensions if they have already been set in place. Bolt a jamb clip to the base of the jamb. Bolt a jamb clip to the jamb at each girt location. Bolt a jamb clip to jamb at header location. Bolt a jamb clip to top of jamb. Fasten the jamb to the foundation. Plumb and square jamb. Field drill holes and bolt to eave purlin, rakebeam or overhead girt. Attach header to bottom of jamb clips at correct height. Attach wall girts. After all adjustments have been made field weld jamb clips at overhead door locations.

Figure 28. Jamb Clip Detail

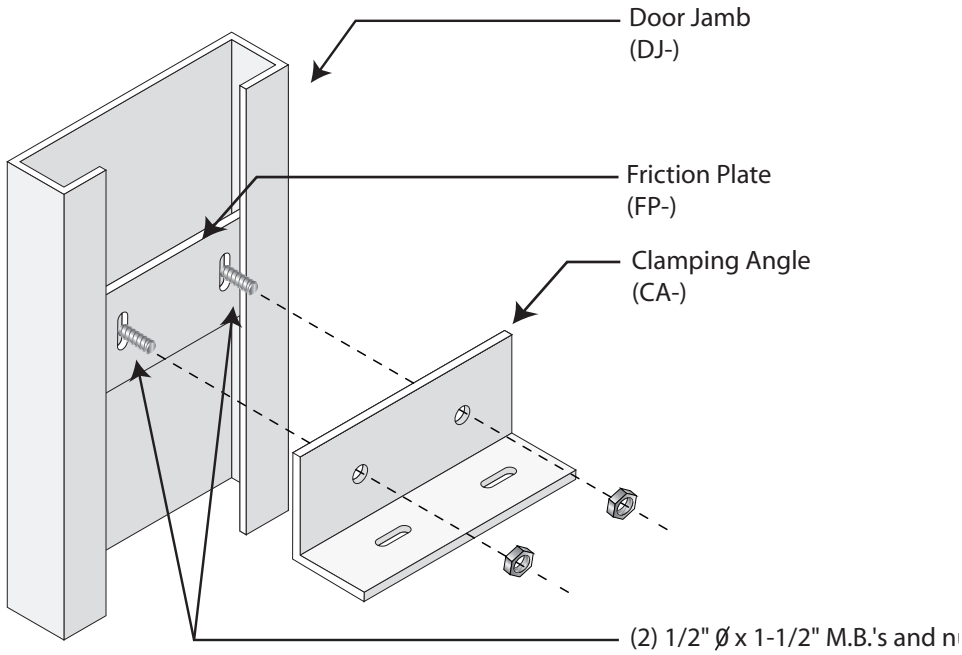

BASE ANGLE

Base angle is used to fasten wall sheeting to the foundation. It may be necessary to miter an edge at the corner to start and at framed openings. Attach the base angle to the foundation at 2' OC using a ramset or 1/2" expansion anchors.

Figure 29. Base Detail

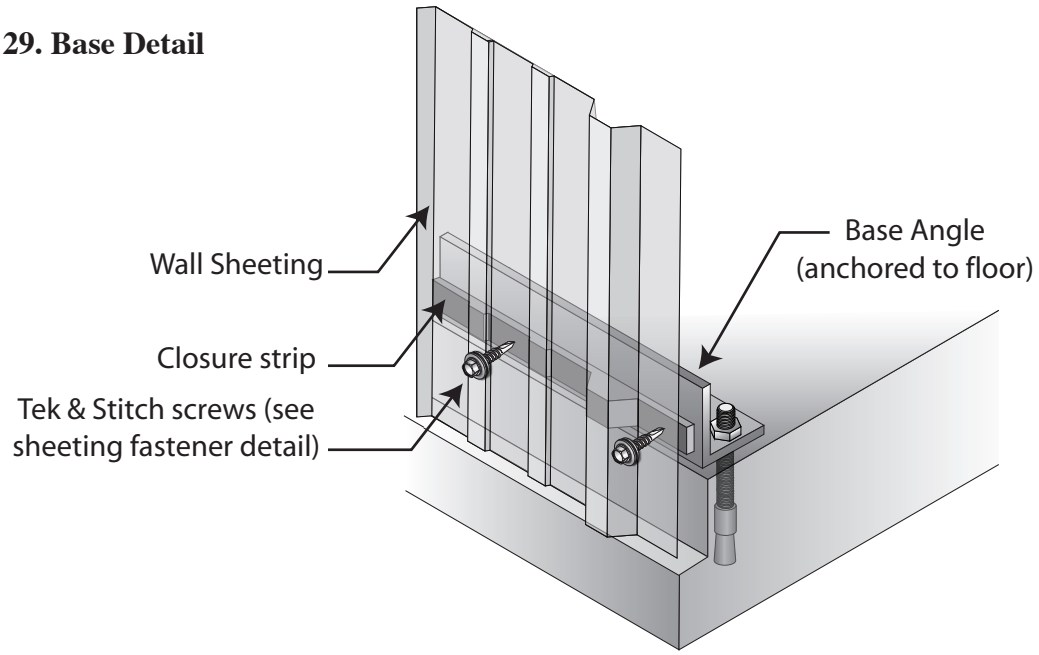

SECTION V
SHEETING INSTALLATION

Structural Inspection

Before installing panels, check all structural bolts for tightness. Make sure that all flange braces, purlins, girts and X-brace cables are properly installed, plumbed, braced, squared and tightened also sag angle (bridging) should be installed before sheeting.

With all primary and secondary framing plumb and all the bolts properly torqued, begin sheeting with the sidewalls. Color coated sheets should be handled carefully. When unpacking, pick up sheets, never slide one sheet over another: never walk on sheets except when applying roof sheets. Never walk on the major corrugations of sheets. When lifting, support long sheets to prevent buckling. When storing sheets elevate one end so water will not stand on and between sheets. Condensation and moisture will cause damage.

Cover sheets with waterproof material, but do not seal, as this will add to condensation damage. All sheeting must be kept dry. Galvanized sheets will develop white rust stains if moisture intrudes. Refer to the unloading section for further information concerning storage of sheeting.

Bridging of Purlins

Purlins and girts will sag from their own weight when unsupported. To maintain alignment of girts and purlins during sheeting installation, we recommend that 2" x 4" wood blocking be used as shown in figure 30. Blocking at the center of each bay less than 25' should be sufficient for alignment. After one blocked bay is paneled, the blocking can be moved to align the next bay. Use the same procedure for all purlins and girts.

Figure 30.

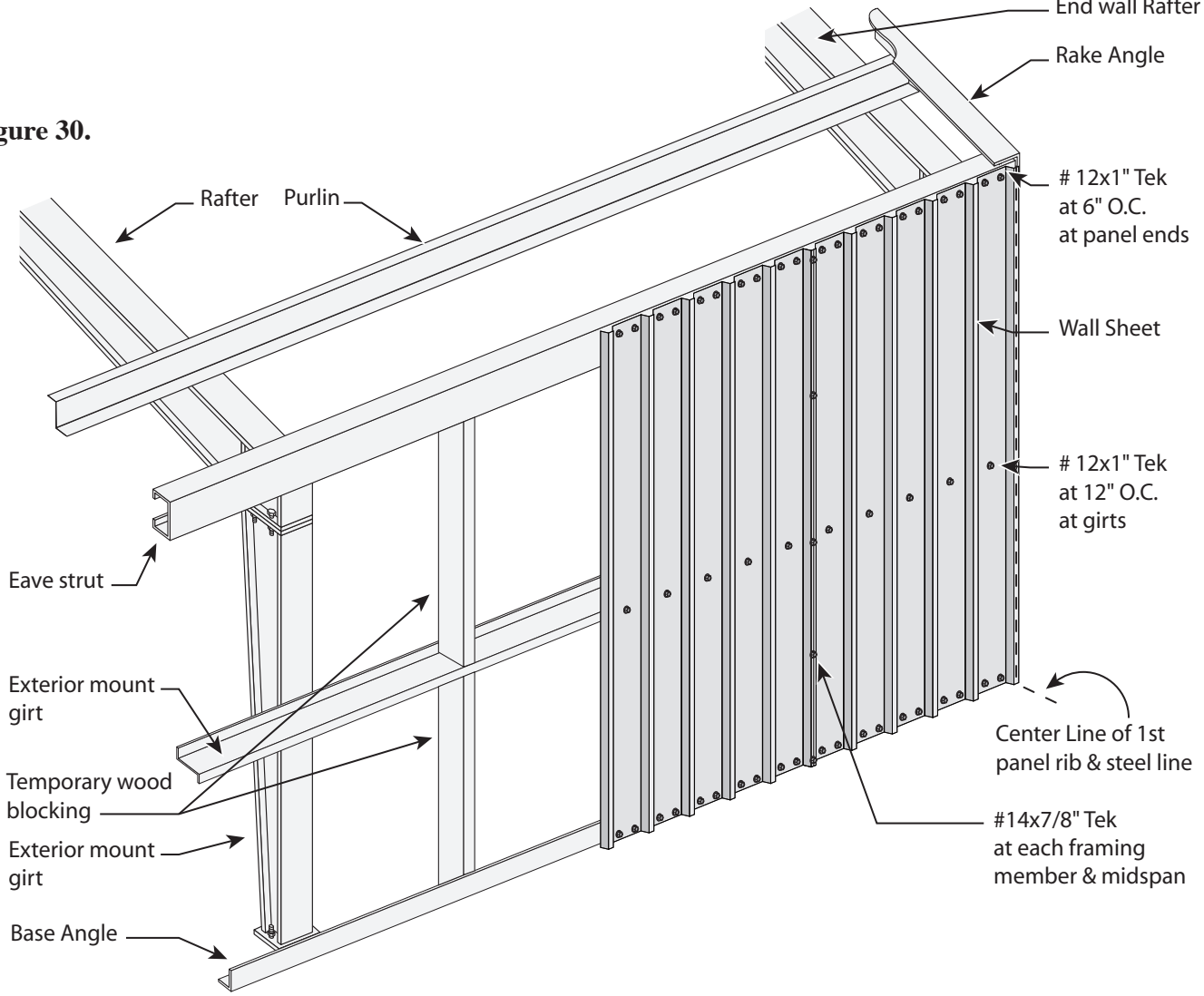

Girts should never be walked on or used as a ladder This might bend and weaken the girt making it difficult to align the outer flange and threatening the structural integrity of the building.

If your building has MBI insulation, refer to the insulation application section page 41 before beginning panel installation.

Sidewall Sheeting

Before sheeting any wall, block the girts to a level position and do not remove until the panels have been securely fastened to the sub-framing. Full sheets are used to cover jambs of each framed opening. Shorter sheets will have been supplied above large framed openings. No allowance is taken for walk doors or window framed openings as they are to be sheeted solid.

Wall sheeting may be applied in two ways. The way it is applied is to be determined by the customer or erector. First, wind may be the primary consideration and the panels should be applied starting at the end of the building which will allow the exposed edge of the lap to be away from the prevailing wind. This method will lessen the air infiltration in the building. A second method that may be used is where the visual appearance of the building is important. If this is the case, start sheeting at the rear of the building and the laps will not be seen from the front (the side or end viewed by the most people).

Figure 31. Typical Sidelap

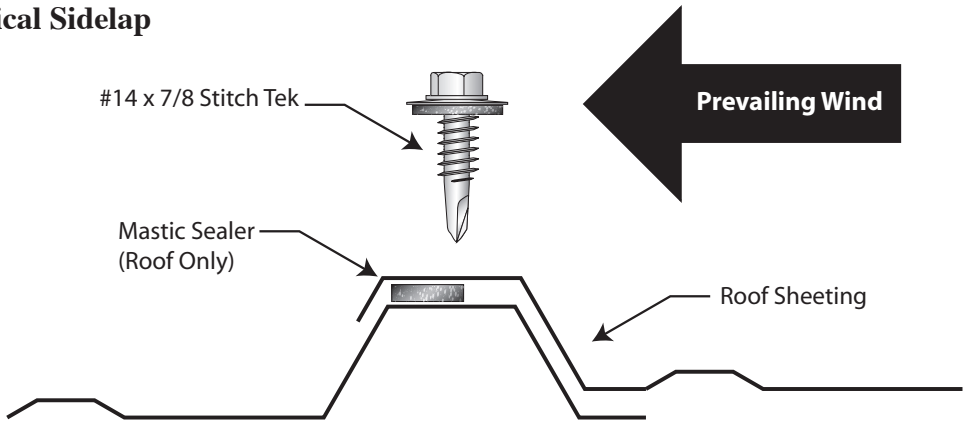

Screw Alignment

Screw alignment especially on the wall sheets will give a professional appearance. This can be accomplished by pre—drilling holes in the sheets at identical locations. The locations of the purlins and girts should be carefully marked on sheet and then double checked against the building framing.

Pre—drilling of panels will insure accurate placement of fasteners, alleviating the problem of installing a fastener through the panel and missing the framing member. Pre—drilling also provides a punch mark for the screw and will prevent panel damage caused from "skating" screws.

Preparing the Drilling Template

Step 1 Layout a drill hole pattern on a wall panel as shown in figure 32. (See Figure 51 for fastener spacing.)

Step 2 Drill holes in template panel. Use 1/8" bit for stitch TEK in the high rib and 3/16" bit for sheeting TEK.

Step 3 After pilot holes are drilled, place template against sidewall and check hole alignment with eave strut girts and base angle. If holes are properly aligned proceed with drilling stacks of wall panels.

Step 4 Lay out a nested stack of panels on supports as shown in figure 32. From 6 to 15 sheets can be drilled at one time: however, best results are with stacks of no more than 8 sheets.

Step 5 Make sure that panels are aligned at both ends of stacks and that side laps are supported. With template panel in position clamp stack securely with "C" clamp as shown (figure 32).

Figure 32. Pre-drilling Panels

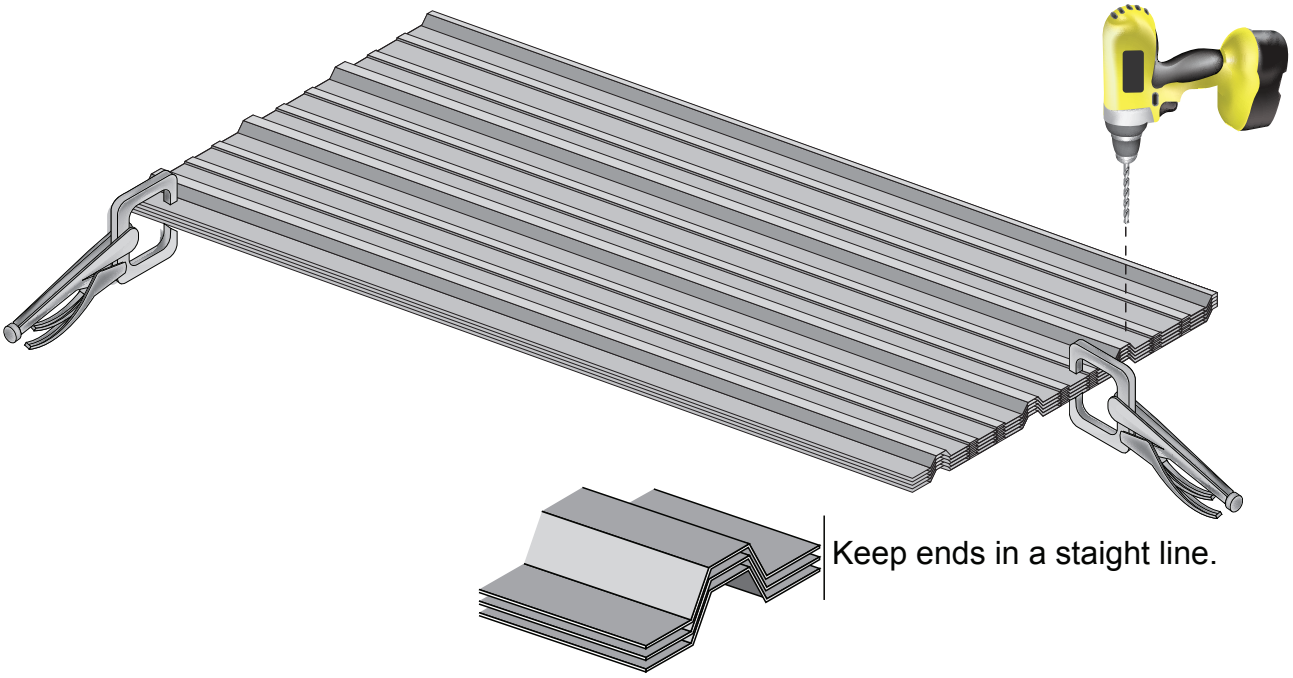

Step 6 Drill through the secured stack at each of the pilot holes. Be sure drill is held at 90° to the stack. After each hole is drilled insure sheeting alignment has not been disturbed. Drill only enough panels to cover one sidewall. A new template with reverse hole layout must be made for opposite wall.

Installation of Wall Sheets

The accordion action of the panel allows gain or loss to be controlled as necessary to keep panels aligned. Unless specified otherwise the panel will provide a full 36" of coverage.

Step 1 To assure alignment of panels the panel spacing should be laid out and marked on eave and base angles. The first and last panel will cover 37-1/2" all others cover 36".

Step 2 Position foam inside closure at the bottom of the sheet where it will fit between the panel and the base angle as shown (figure 33). The closure can be held in place with a small amount of mastic.

Figure 33. Base of Wall Sheet Detail

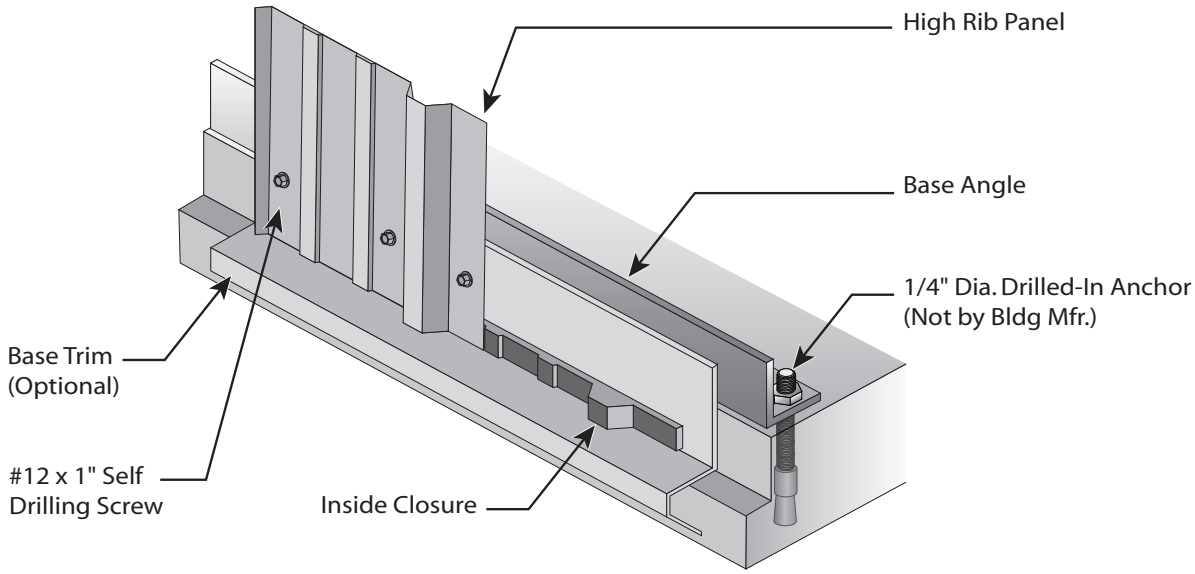

Step 3 Insure that blocking is in place. Raise first panel into position with 1/2 of major corrugation overlapping the endwall steel line. Insure that the panel is vertical using a 4 foot carpenter level.

Step 4 With panel held securely in alignment, screw into place with self drilling TEK at base angle and eave strut. Check alignment.

Step 5 When panel is aligned correctly install TEK's at all base angle, girt and eave strut locations.

Step 6 Install second and remainder of panels by screwing to girt and then fastening to eave strut and base angle before installing side-lap stitch screws. Insure closures are positioned properly before attaching panel.

Step 7 Move blocking to next bay after paneling has reached its location. Each bay must be completely blocked before starting sheeting of that bay.

Paneling Opposite Sidewall

Step 8 Prepare a new template with reverse layout of hole patterns. Lap should face the same end of the building.

Step 9 Stack and drill panels using the same procedure. Be sure to check alignment of template holes with wall structurals before drilling stacks of panels.

Step 10 To assure alignment of panels the panel spacing should be laid out and marked on cave and base angles. The first and last panel will cover 37-1/2" all others cover 36". Start measurement from same end of building as first sidewall.

Step 11 Install first and remaining panels as on opposite sidewall.

WALL LIGHTS

Wall lights may be used in place of steel panels for natural interior lighting. Laps must occur at a girt with 1" below the girt level. The wall light panels should have sidelap sealant applied on the perimeter of the light panel. Pre-drill and fasten carefully with Tek screws.

ENDWALL SHEETING.

Endwall sheeting is applied exactly the same as the sidewall sheeting except the high rib and lap are centered on ridge (peak). See figure 34. The roof pitch is taken into consideration for actual lengths, with some field fitting (figure 34) required. Lay out sheets for position. Full sheets are supplied. Back laps (when necessary) should be taken at corners. Endwall sheet started at center of building will need to be back—lapped on right hand edge. Do not fasten until adjacent sheet is in place. Pre-drill and fasten carefully with TEC screws. Attach corner trim with stitch TEK's after side and endwalls are sheeted (figure 35). Align with sheet. Use a 3" lap.

Figure 34. Endwall Sheeting Layout

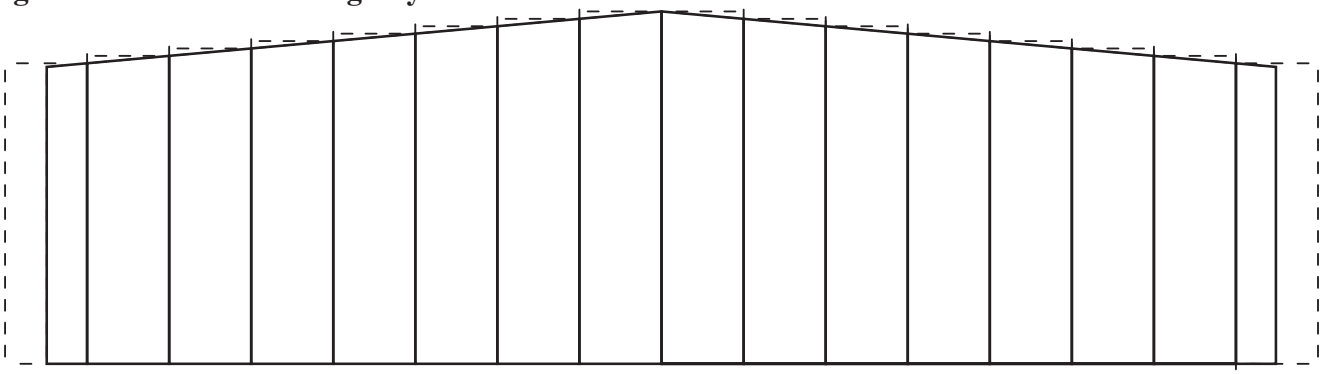

Corner Trim

Once the walls have been sheeted, the corner trim may be applied. Starting at the bottom align the corner trim with the sheet and attach it on both sides with TEK screws at 2'-0" center. When lapping is required use 3" lap and fasten with stitch TEKs or pop rivets.

Figure 35. Outside Corner Trim

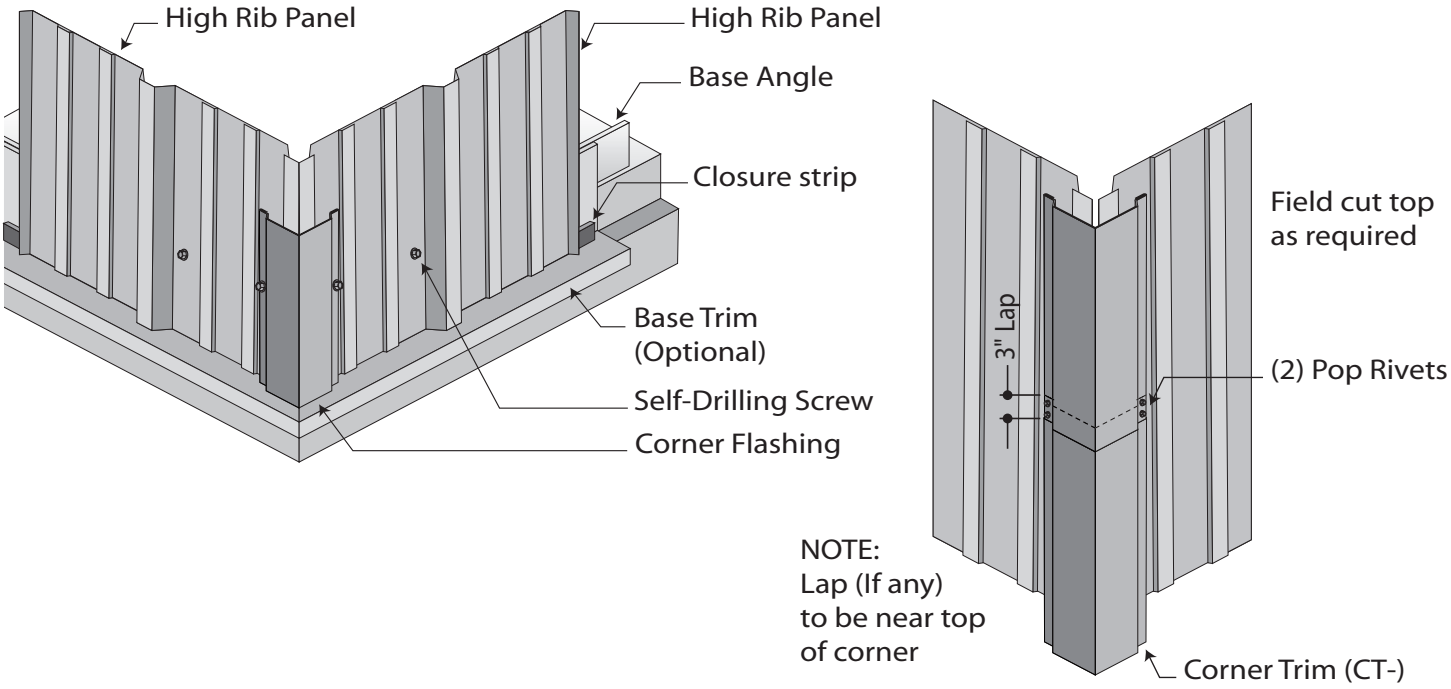

Eave and Gutter Flashing

Both eave fascia and gutter must be installed before roof is sheeted. Care must be taken that forward edge of fascia remains at right angles to roof pitch.

Figure 36. Roof Sheet with Eave Fascia Detail

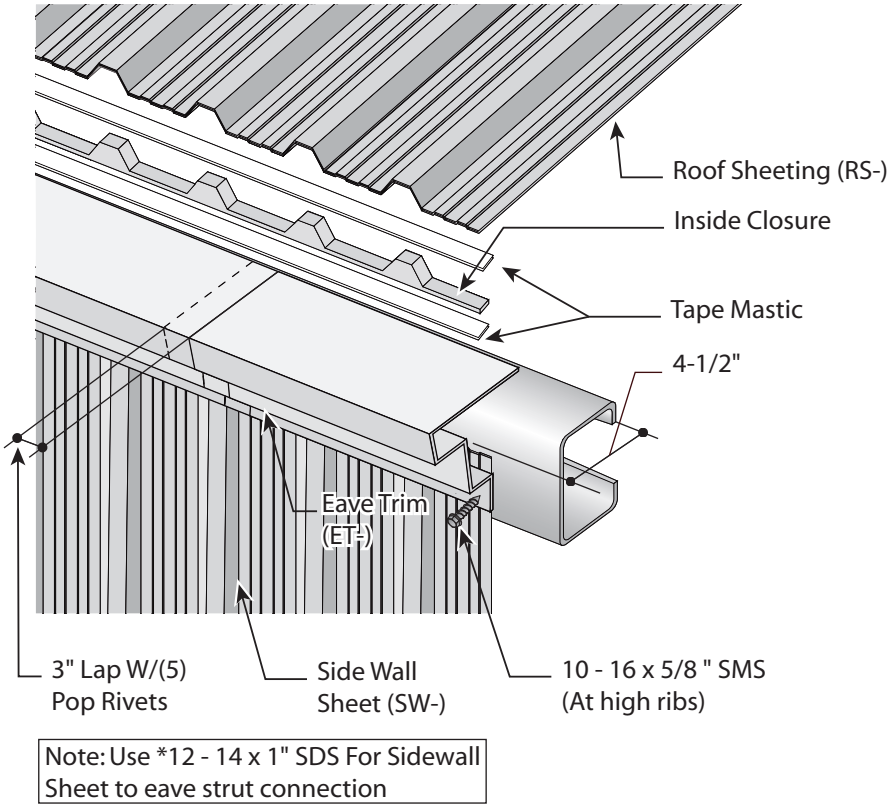

Miter Detail, Eave to Rake

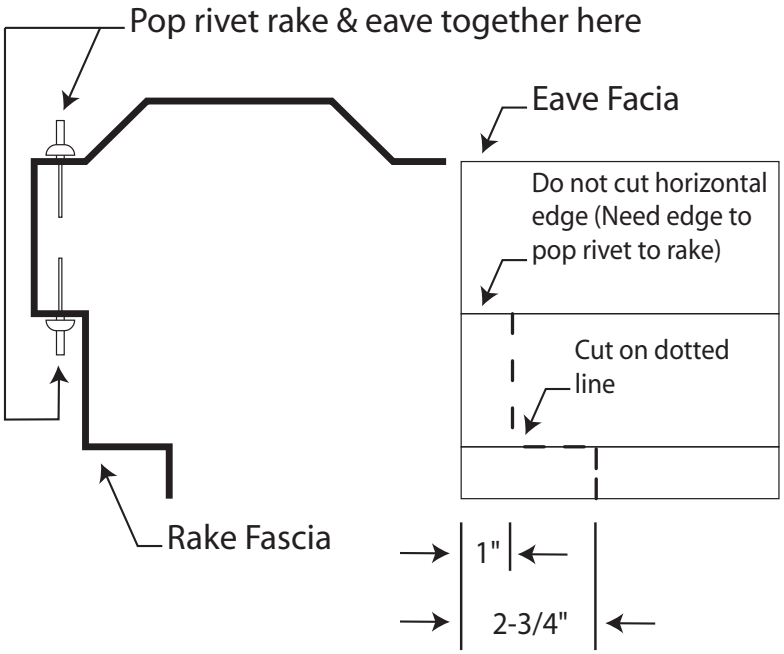

Eave and Gutter Flashing (cont.)

Pop rivet gutter end caps to gutter, starting with base and then up the sides.

Figure 37. Eave Gutter End Cap Detail

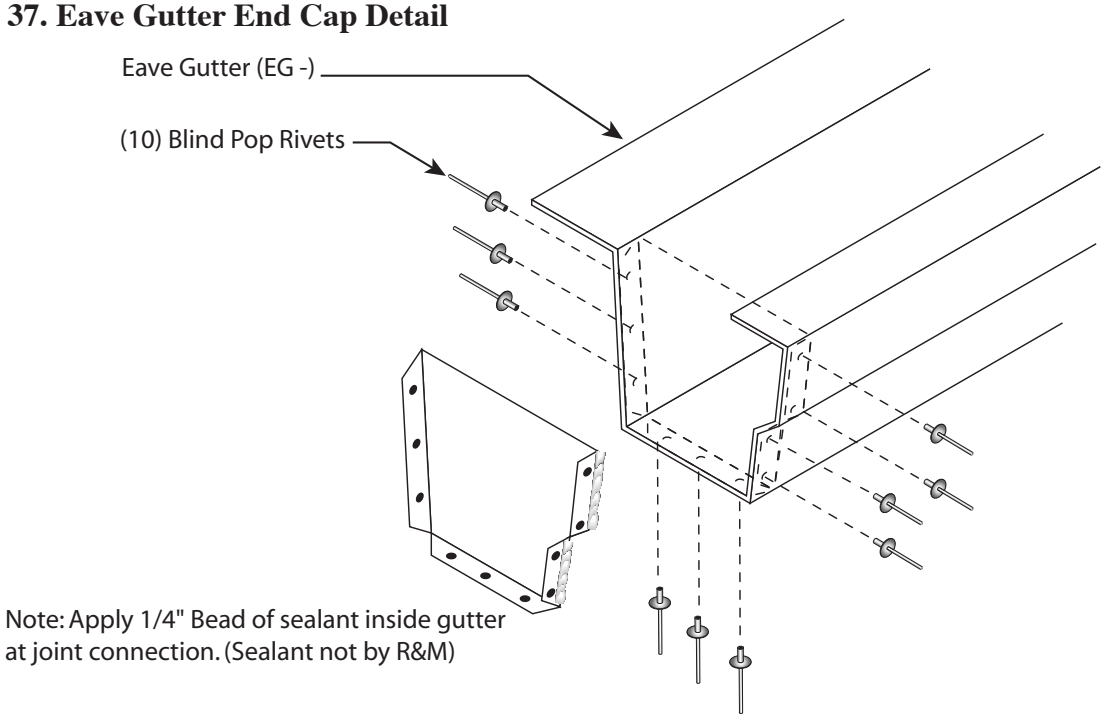

Down spout holes in gutter should align with high rib of wall sheet. For down spout location, position down spout to the back of gutter base. Mark outline of down spout. "X" corners and cut. Bend downward for later attachment of down spout.

Figure 38. Downspout to Gutter Detail

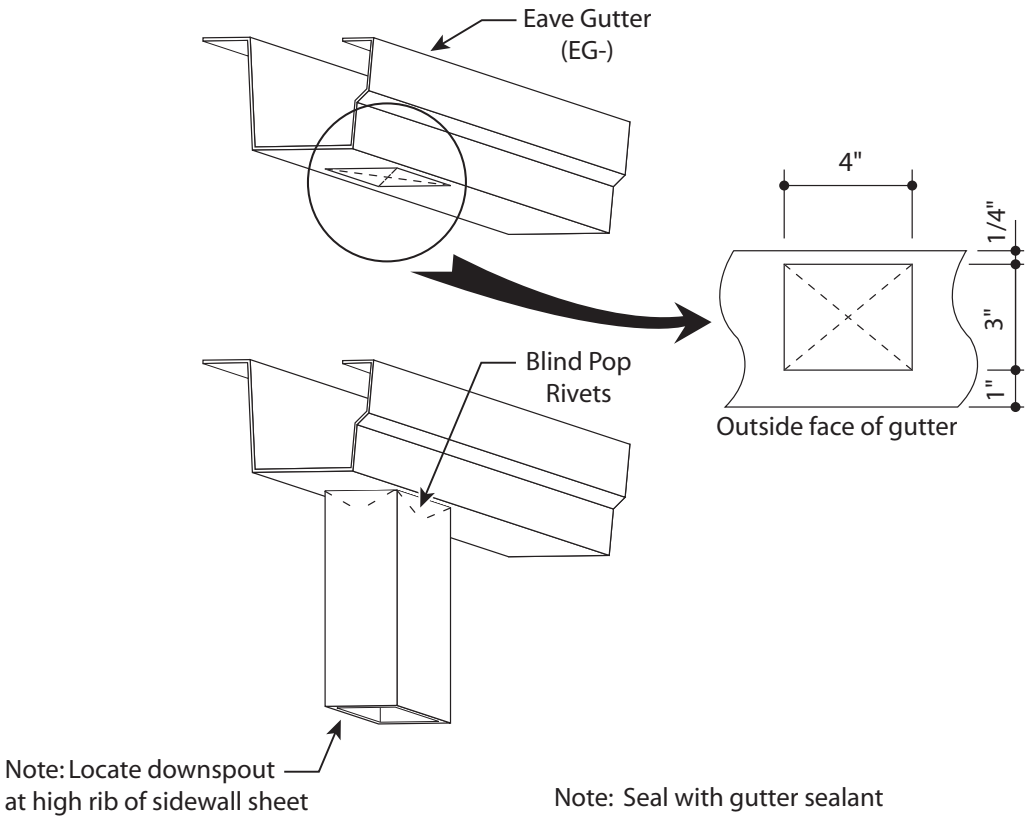

Eave and Gutter Flashing (cont.)

Align eave fascia with corner trim. Line up edge of fascia or gutter with corner of eave strut. Attach to eave strut with TEK screw. (For eave trim, fasten at each major rib of sidewall sheet.) Pop rivet gutter and calk at splices. Attach gutter strap to under side of outer leg of gutter at 3' O.C. Attach to eave strut with self drilling TEK.

Figure 39. Roof Sheet with Gutter Detail

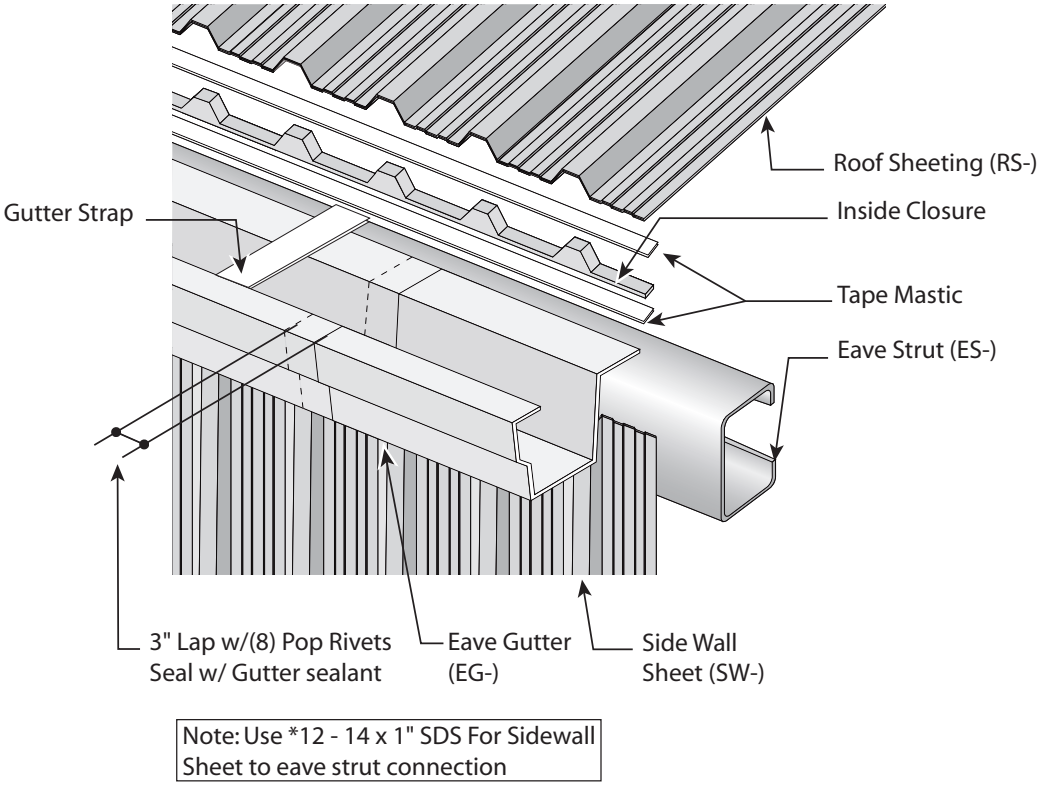

Pop rivet down spout to gutter. Caulk joint.

Attach downspout with downspout strap to wall sheet at 3' O.C. using stitch TEK's. Attach elbow to base of down spout. Always work down spouts so lap is from top down.

Figure 40. Attachment of Downspout Detail

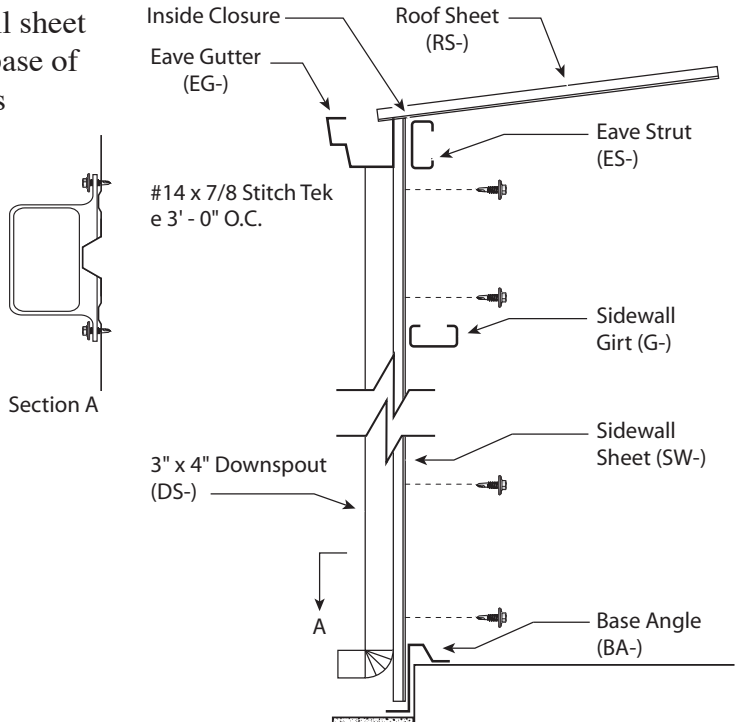

ROOF SHEETING

Step 1. Make a template by measuring the hole dimensions according to the erection drawings and prepare a template as you did in sheeting the sidewalls.

Step 2. Place template panel in position over roof structurals and check hole alignment.

Step 3. After checking template alignment, place template on stack of roof panels and pre-drill holes. Make sure that stacked panels are aligned, supported and clamped. See figure 32. Hold drill in true vertical position when drilling. If your building requires insulation, it will be necessary to prepare templates for both sides and pre-drill sheets before panel installation is started. Note that 1/2 of the major corrugation overlaps the endwall steel line.

Installation of First Panel

Step 4. Install first panel as shown in figure 41. Apply tape mastic to outside of high rib to be lapped and 4" from upper edge of sheet. (This will cover both sheet lap and ridge cap lap.) Inside closure with tape mastic top and bottom should be placed at the eave at this time. Care must be taken to insure roof sheet is aligned correctly before sheet is lowered and allowed to bond with the mastic.

Figure 41. Installment of First Roof Panel

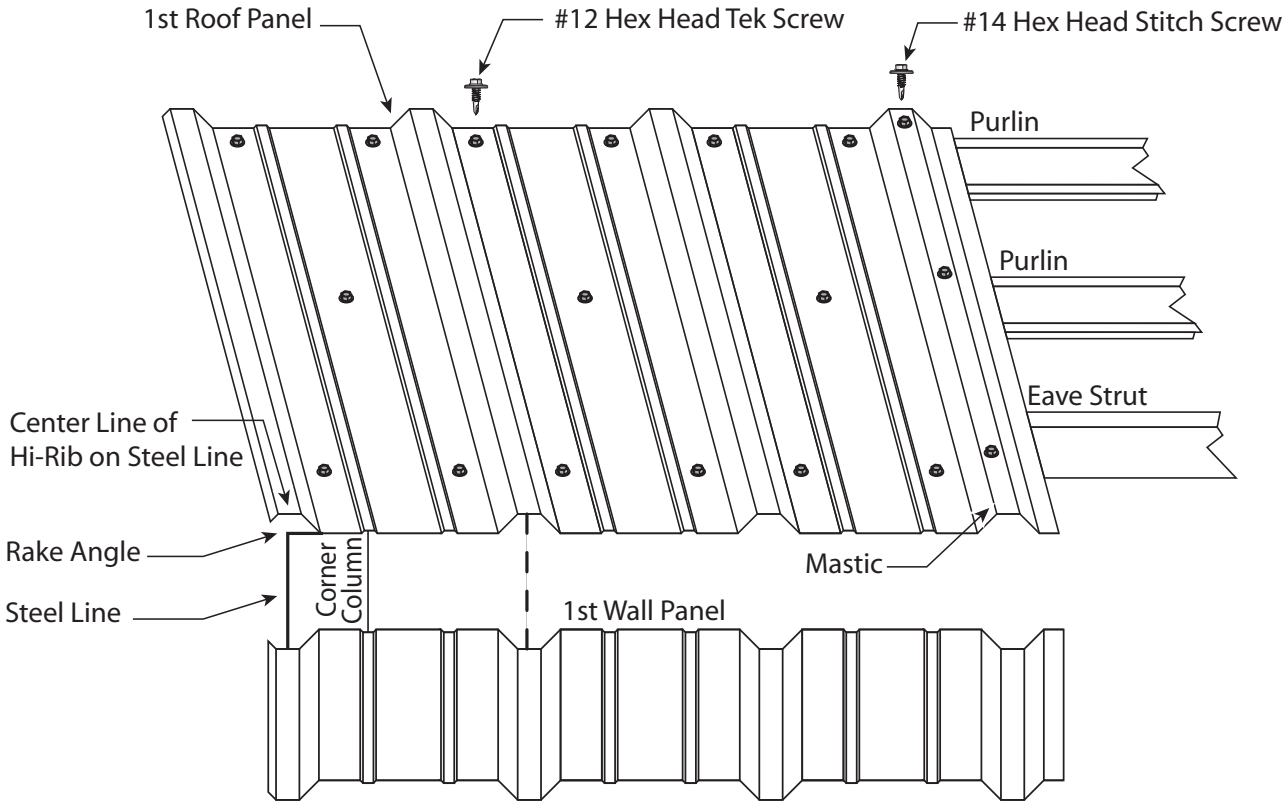

ROOF SHEETING (cont.)

Step 5. Align pre-drilled holes with structurals and fasten sheet to purlins and eave strut. It is essential that the first row of panels be accurately aligned in order to insure overall accuracy. We recommend installing the panels in the proper sequence. See figure 42.

Figure 42. Roof Panel Sequence

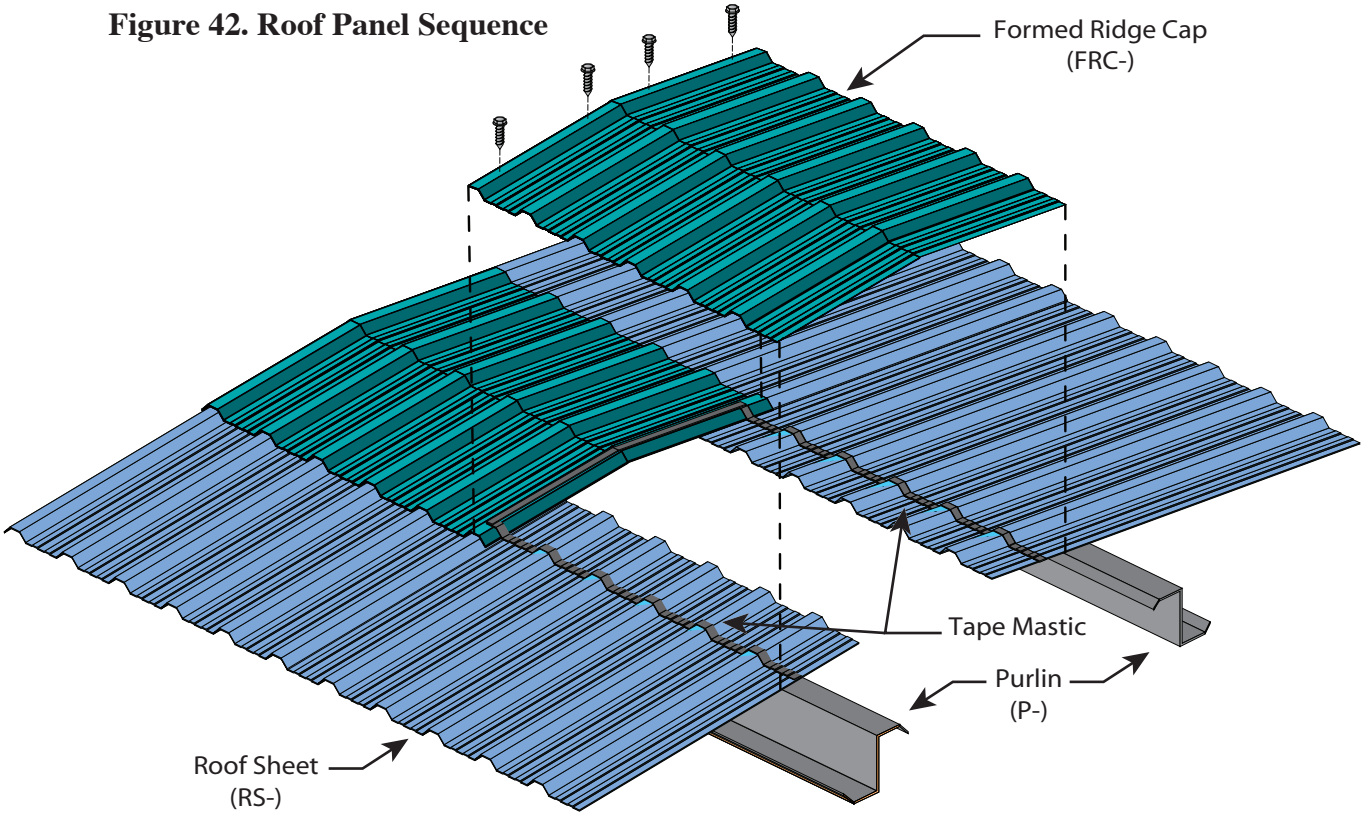

NOTE: FOR FASTENER SIZE AND SPACING, SEE ROOF FASTENER PLACEMENT SHEET.

By installing the panels as shown, each panel run can be checked for accuracy as paneling progresses. Apply roof sheets to each slope as shown in figure 42. After sheets have been properly aligned and secured to the structurals. Apply mastic to major corrugations at sidelap. Then apply the next full length sheet to each slope. After two panels have been applied to each slope, install the ridge cap to the first run. After the first ridge cap is secured, the third panel run can be installed. Then apply the ridge cap to the second run.

In summary you must stay one panel run behind in your application of ridge cap. Roof panels and ridge caps applied in this manner insures that the ridge cap overlaps properly at each panel run and assures proper panel alignment. Should each slope be paneled separately, sheet alignment might vary making ridge cap installation difficult or impossible.

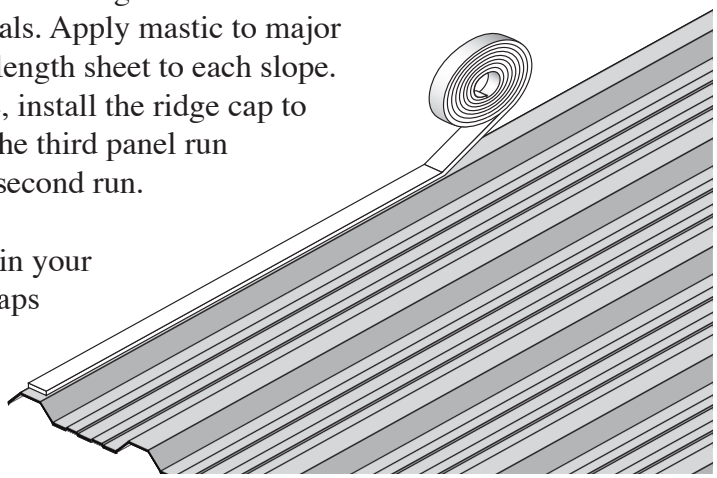

Figure 44. Application of Mastic Sealer

Installating panels in the method specified allows the erector to check the panel alignment as each run is installed.

ROOF SHEETING (cont.)

If panel alignment needs to be changed, the panel can easily be moved a fraction of an inch by kicking the major corrugation with the heel of the foot in either direction. Care should be taken not to bend the major corrugation. As paneling nears the intermediate frame, the dimension from the frame to the leading edge of the roof panel should be checked, at several different positions to be sure that the panel placements are square with the structural system (figure 45).

Figure 45. Check Panel Alignment

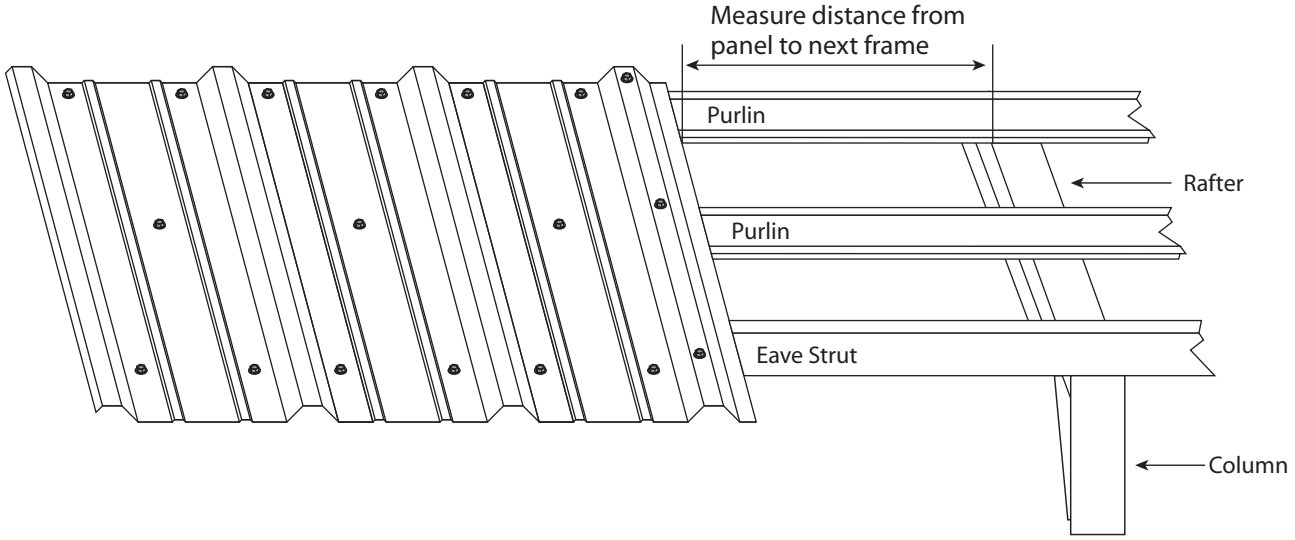

Completing Roof Panel Installation

Continue installing remaining runs of panels following these same procedures.

Note: When paneling reaches wood bridging in first bay, move bridging to next bay.

If your building order includes skylights or ridge vents, be sure to coordinate the installation of such accessories with the paneling of your roof. Roof lights should extend beyond purlin 6" for proper lap. See figure 46 for fastening and sealing.

Figure 46. Skylight Detail.

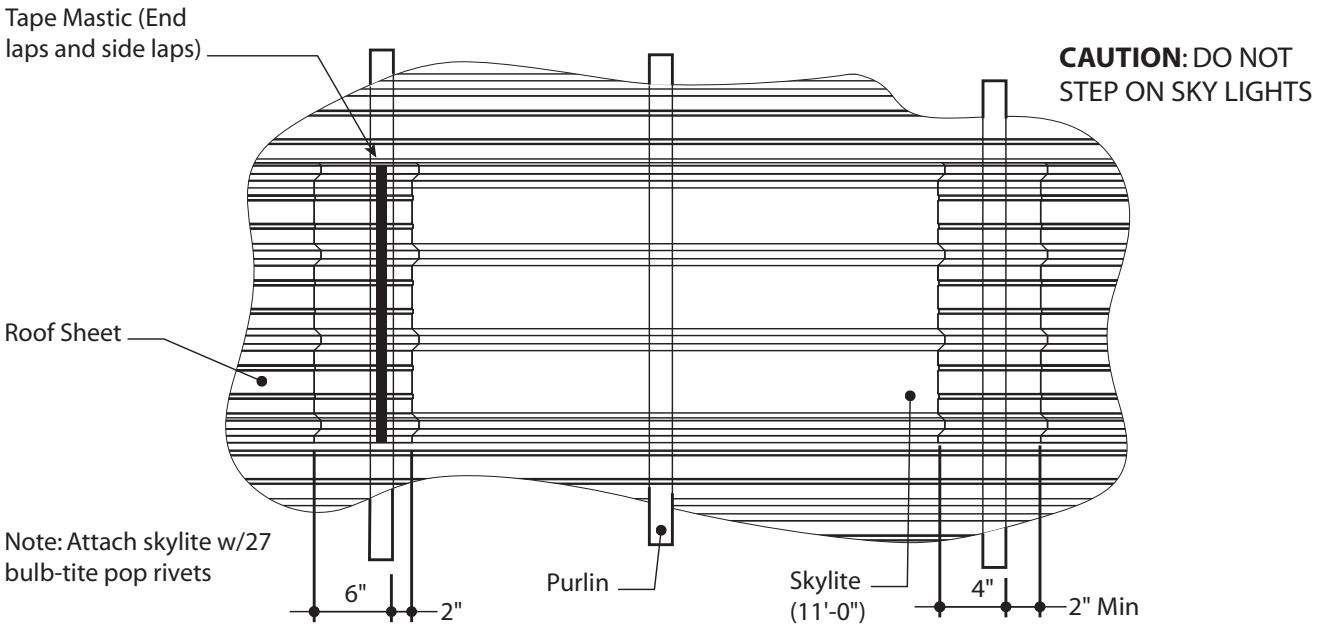

RAKE TRIM

The rake (gable) trim will finish the connection between the endwall sheeting and the roofing. Apply sidelap sealant between the gable trim and the roof panel. Screw to roof sheet 3' O,C. to rake. The standard minimum lap of 1" at each splice should be used. Pop rivet the lapping connection. Fasten the gable trim to the wall sheet at each high rib with a stitch Tek screw. Miter rake trim of gable building at ridge and attach peak box.

Figure 47. Rake Trim Detail

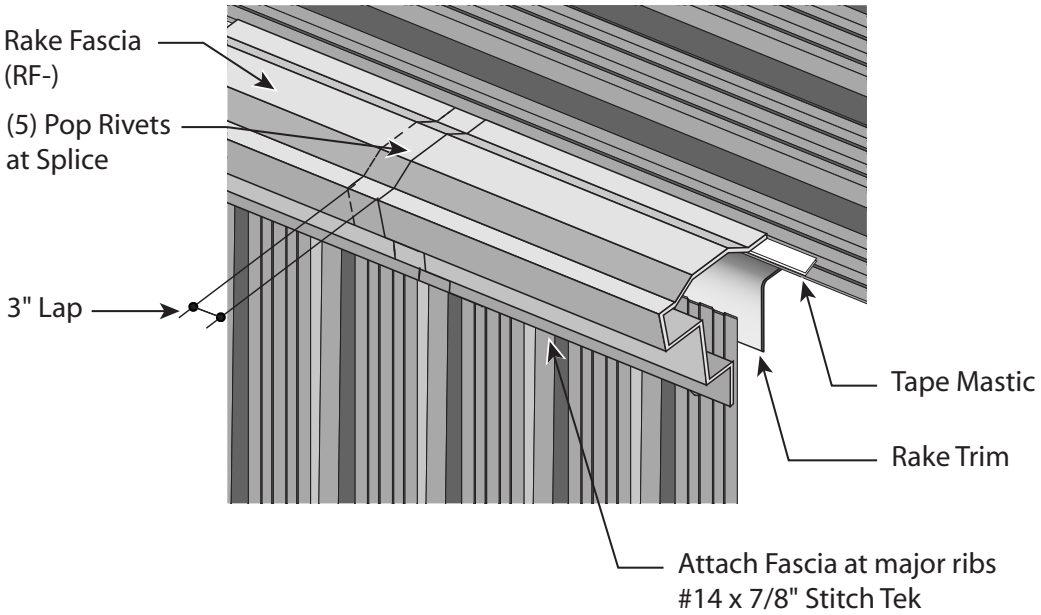

Figure 48. Name Plate Detail

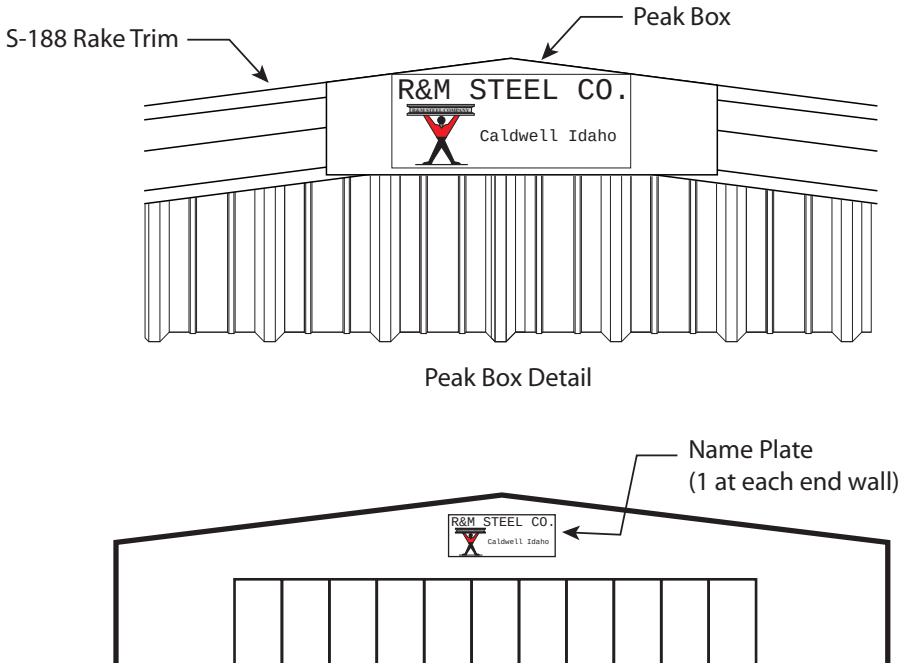

Walk Doors

Cutout must be centered between high ribs. Cut opening in wall sheet 3’l" wide x 7’0 3/8, high. Extend horizontal cut 3" each side for header trim. Attach base clips to jambs. Jambs are reversible for right, left, In—or outside swing. Attach header and 1 z—clip to 1 jamb (with hinges.) Place jamb and header into place. Make sure wallsheet laps behind flange of door jamb. Square at base, cinch anchor. Square hinged jamb and secure to girt. Place other jamb into position. Connect to header, and door, position loose jamb for snug fit with door (twenty-five cent piece may be used). Square cinch anchor at base and bolt to girt. Attach door jambs and secure to wall sheets with sheet metal screws through pre—drilled holes Slide header trim behind wall sheet level and attach with self drilling screw (3). Caulk entire periphery of door. Attach lock sets and threshold.

FRAMED OPENING TRIM

Cut off excess wall sheet approximately 1/8" from inside edge of jamb.

Figure 49. Jamb Trim Detail.

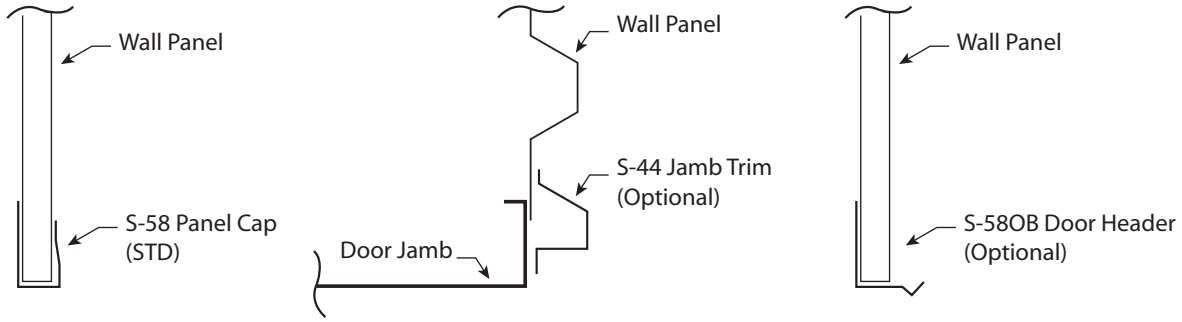

Slot 3/8" beyond width of opening at each end of S—58 header. Position S-58 header trim into slot and between sheet and header. Attach with self drilling screws at 3’ O.C.

Fastener Installation

When fastening sheeting screws to structurals, our company recommends using a high torque, depth sensitive screw gun, used primarily with self—drilling fasteners. This screw gun should be equipped with an adjustable clutch and a magnetic socket. The manufacturers of these self—drilling fasteners recommend that high torque guns run at approximately 2,500 RPM's for proper operation. When installing screws, **proper pressure on the neoprene seal is important**. Figure 50 illustrates correct and incorrect conditions.

Figure 50. Fastener Application

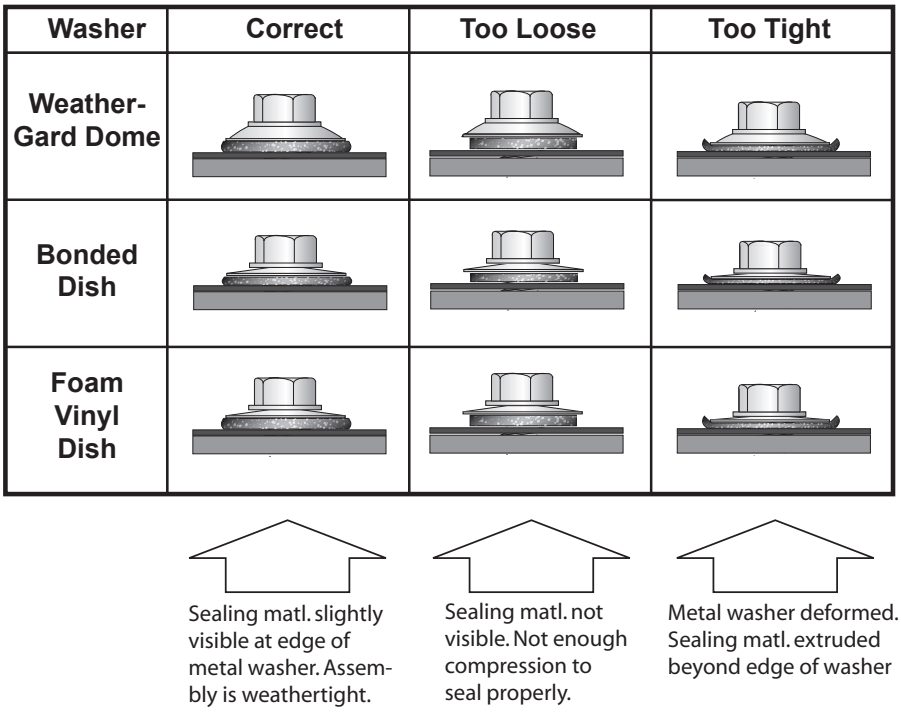

Even with the right equipment and the right setting of the tool no erection crew can install all the fasteners on a building without stripping a few. It is important to know when stripping occurs. The stripped fasteners must be removed and replaced by an oversized fastener.

Always keep the screw gun at 90° to the sheeting to insure a properly seated fastener.

Notes

1 Pre-drilling of fastener and stitch screw holes will greatly reduce application time, improve appearance and provide better sidelap sealing. See screw alignment page 25 for details.

2 Fastening of panels to framing members is accomplished with #12 x 1" self drilling TEK screws. Use colored head screws as required. See figure 51 for locations.

3 Butyl sealant is required between all roof panel side laps and end laps.

4 Stitching of panel sidelaps is accomplished with #14 x 7/8" self drilling STITCH TEK screws. See figure 51 for locations.

5 Remove drill tailings from panels. Bare steel particles can cause rust stains overnight, particularly on colored panels.

Typical Tek Spacing for High Rib Panels

Figure 51. Fastener Patterns

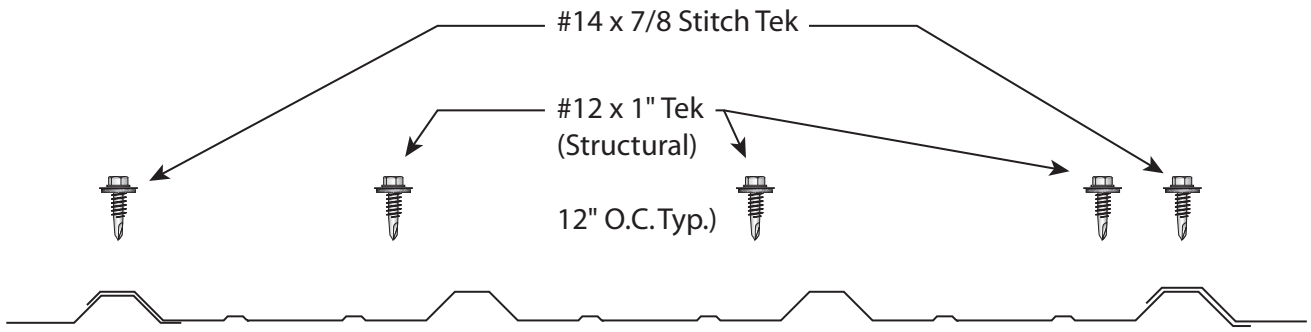

I. Typical spacing at intermediate purlins & girts

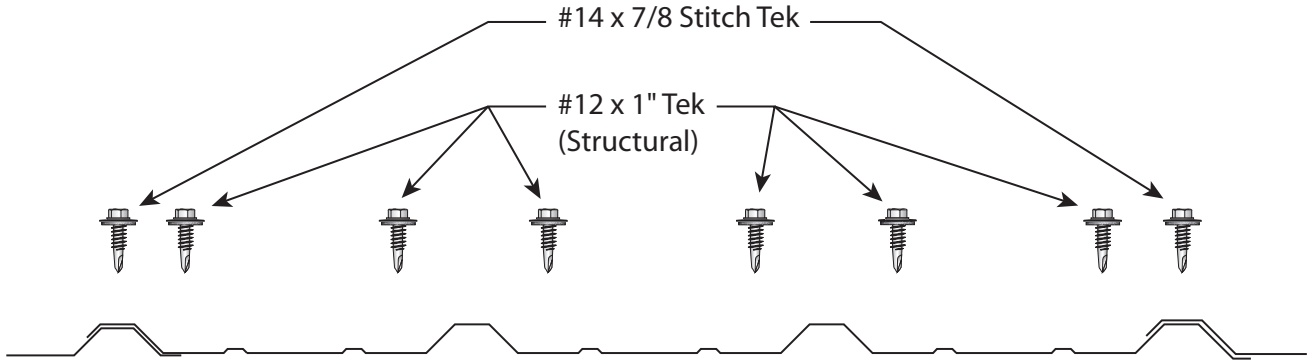

II. Typical spacing at panel ends

1 - Typical spacing at eave strut
2 - Typical spacing at ridge cap
3 - Typical spacing at base angle
4 - Typical spacing at rake angle
5 - Typcial spacing at panel lap.

Typical side lap stitch tek spacing

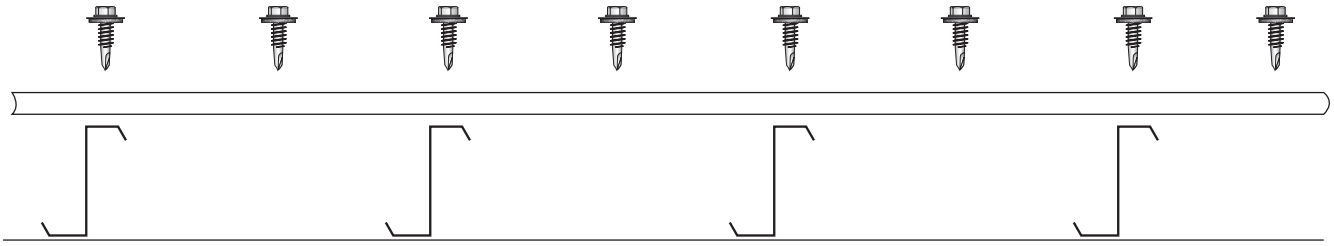

III. Typical side lap stitch tek spacing (Side lap only)

1 - Typical spacing at purlin or girt
2 - Typical spacing at midspan between purlin or girt.

Insulation

If your building includes insulation it should be applied in conjunction with the wall and roof paneling. Insulation should be stored indoors and should never be stored on end. Take every possible precaution to insure insulation does not get wet.

Insulation is available in a variety of widths and configurations. However, our company recommends utilizing a fiberglass blanket type insulation with a vinyl facing on one side, which serves as a vapor barrier. It is also advisable to purchase insulation which has a 2" tab which will facilitate connection of successive runs of insulation. See figure 52.

In order for the vapor barrier of the blanket type insulation to be effective the sidelaps must be well sealed and there must not be any holes or tears in the vapor barrier facing.

At the seam where two rolls of insulation are joined, pull tabs upward and staple approximately every 8", 1/2" from the bottom of the faced side of the insulation. Next, fold the tab over and staple between each original staple. **CAUTION:** Do not staple too close to the base of the tabs or the staples may pull out, resulting in poor vapor seal. The tabs will now be stapled approximately every 4" assuring a tight vapor seal. Tuck the completed sealed tab back into the joint. Be sure to use matching facing tape to repair any rips or tears in the insulation to guarantee a tight vapor seal.

Figure 52. Insulation

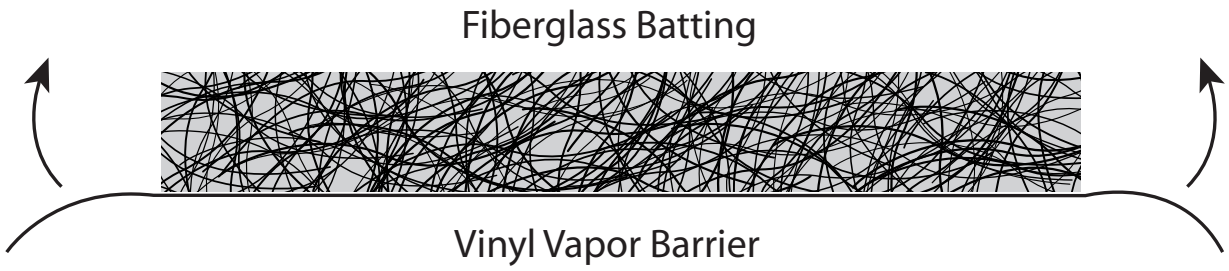

Sidewall Insulation

Step 1 After the template sheet has been prepared and the sidewall sheets have been pre-drilled, measure and cut insulation to length of panel.

Step 2 Trim wool back slightly at each end of insulation. With vinyl facing in and tab facing opposite end of building, position insulation against structure. Tape or glue insulation to eave strut. See figure 53.

Figure 53. Side Wall Insulation

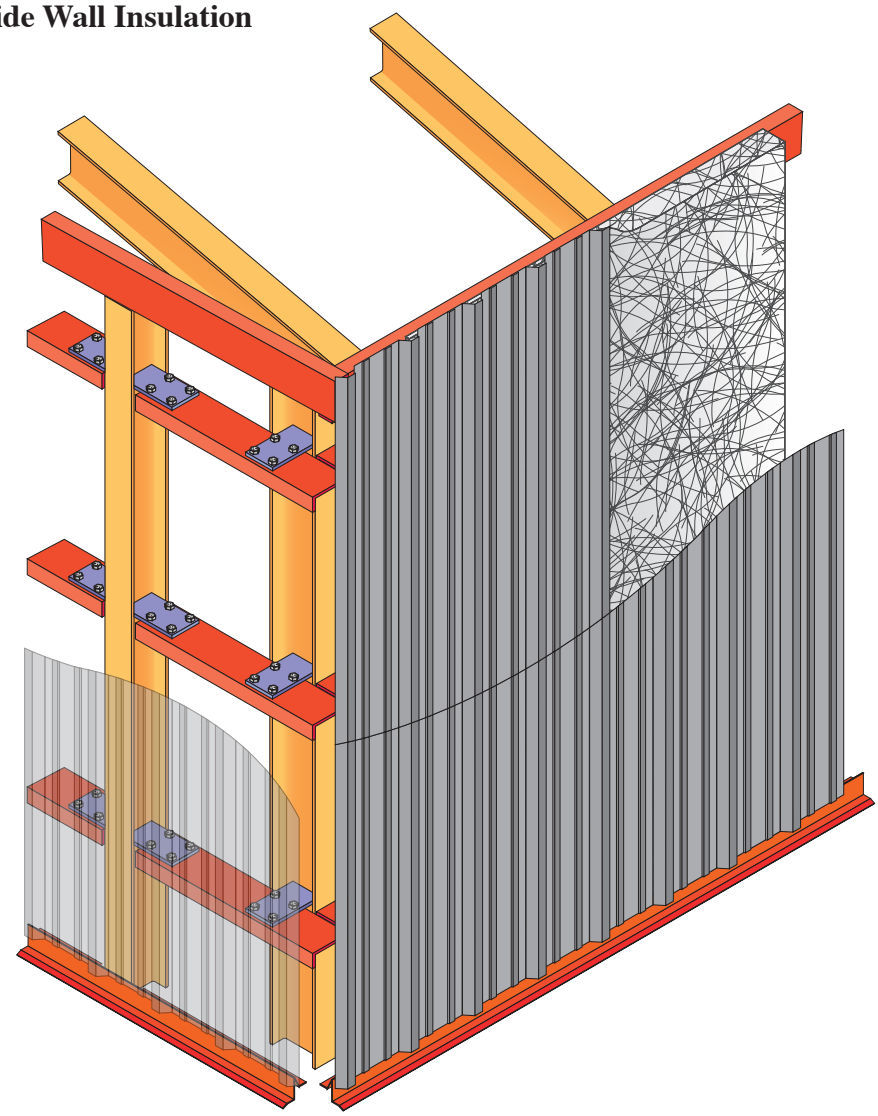

Step 3 With insulation secured at top, pull taut over base angle and secure with adhesive. Insure that insulation fits snugly against foam closure strip but does not overlap. Insulation extending past foam closure will wick water into the building.

Step 4 When first strip of insulation is secured, install your first sidewall panel over the insulation and secure it as covered in Sidewall Paneling Section. Before securing panel, check vinyl side of insulation and smooth out any wrinkles to maintain good interior appearance.

Step 5 Cut second strip of insulation same as first and apply with side butted snugly against edge of first.

Step 6 Install second panel as shown in Sidewall Paneling Section. Again, insure that vapor barrier is wrinkle free.

Step 7 Apply adhesive or tape at insulation sidelap and press tab into firm contact with adjacent insulation.

Step 8 Continue down the wall, applying strips of insulation and panels following the same procedures.

If the vapor barrier is punctured, it can be repaired by applying a small amount of epoxy resin or tape.

Insulation and panel installation should not be attempted during high winds

Insulating the Roof

If a 4’ strip of insulation has been provided, our company recommends using this for the first run of insulation. Since our panels are 3’ wide, the 4’ run will allow an initial 1’ overhang which will facilitate connection of successive insulation runs.
Pieces of wood should be cut to 4’ in length in 4’ (if a 4’ run has been provided) and. 6’ in length. See figure 54.

Figure 53. Roof insulation

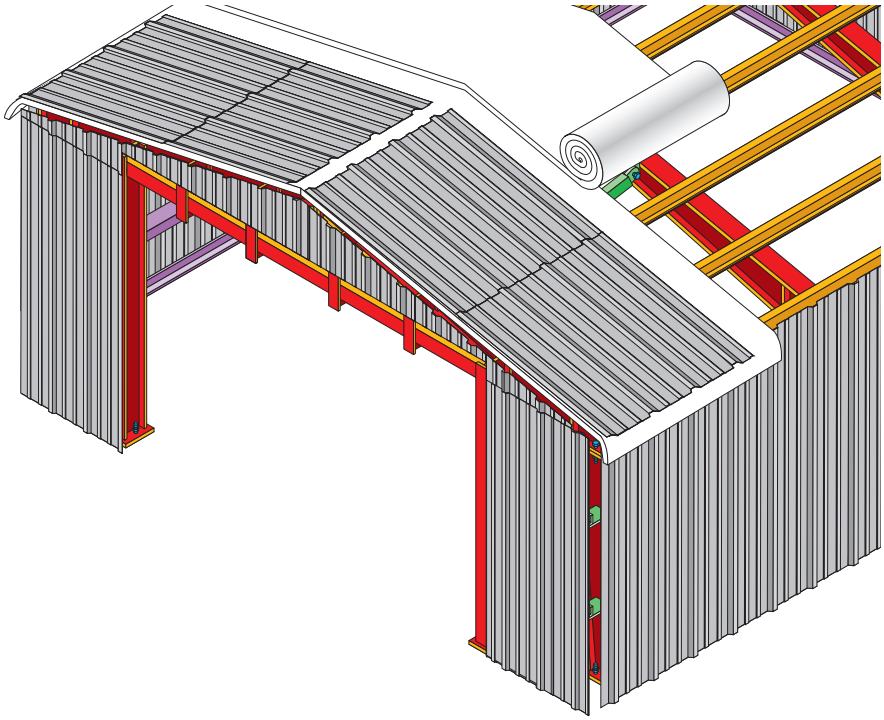

The insulation can be clamped between the boards at each end of the insulation with a clamp and hung over the eave. Weight will help pull wrinkles out of the insulation.

The pre-drilled roof panel can then be positioned and aligned over the insulation and screwed to the purlins. Again, insure proper alignment of panel and ridge cap. (Refer to Roof Paneling Section for proper paneling sequence.)

Once the first run of insulation and panels is in place, the second insulation run can be butted up against it. Connect insulation strips utilizing sidelap tabs or tape. Continue insulating the building. Remember to check panel alignment and to move bridging boards as work progresses.

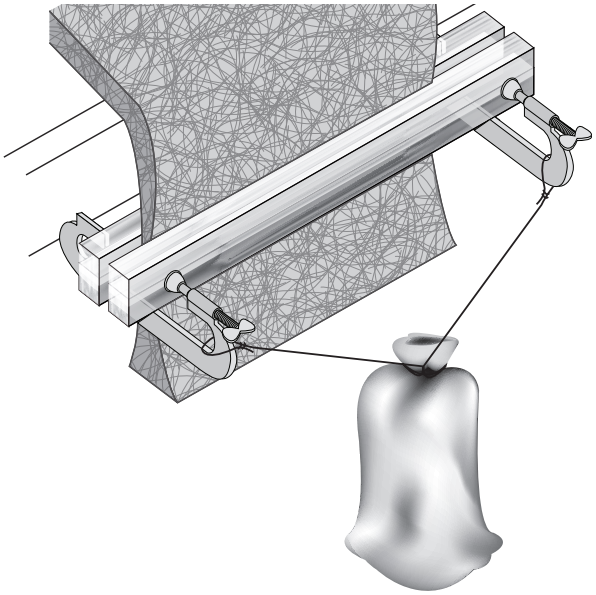

Insulating the Roof (cont.)

S-17 Eave Trim Detail & Wall Stitch Tek Layout

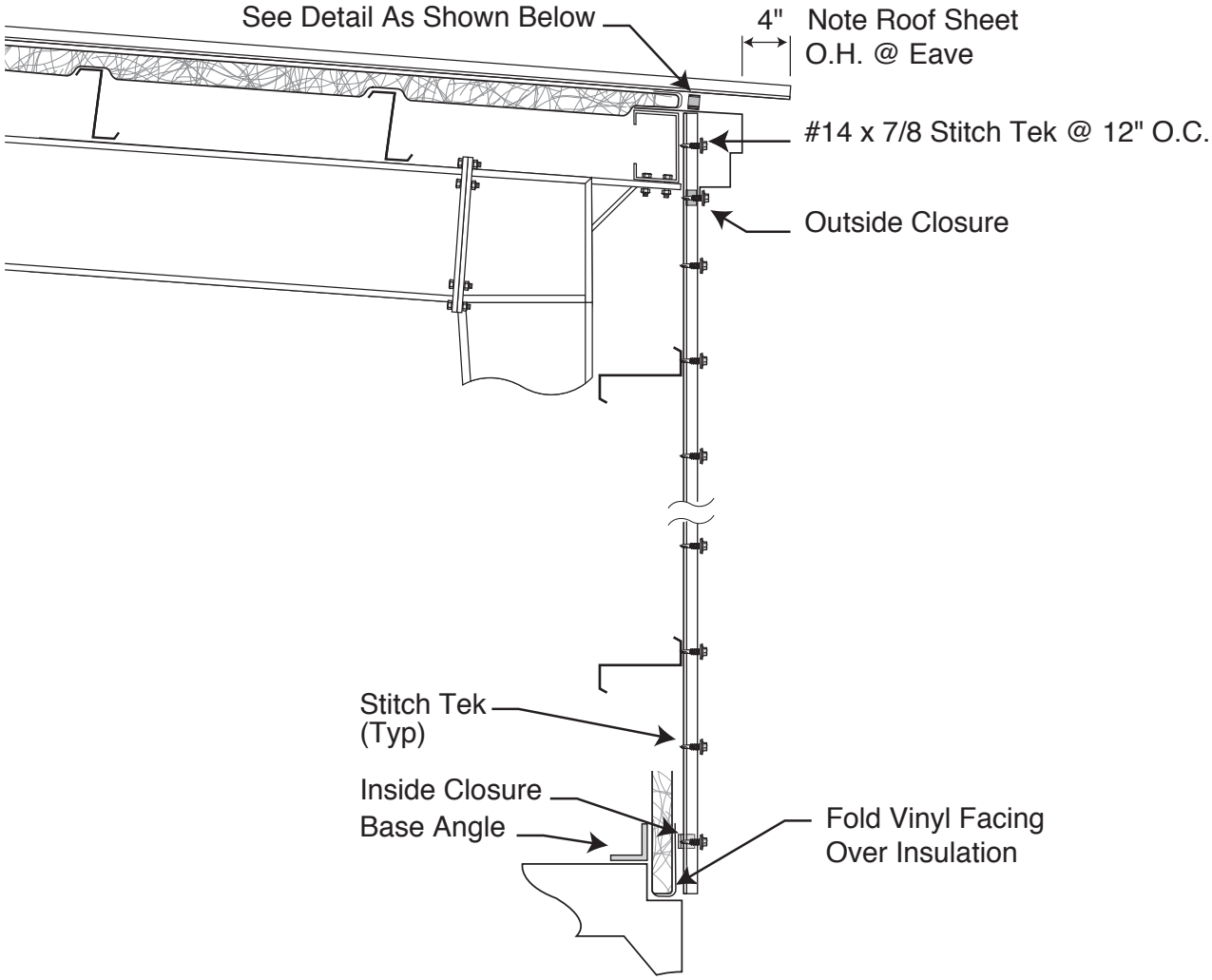

(Eave Trim and Insulation Exploded View)

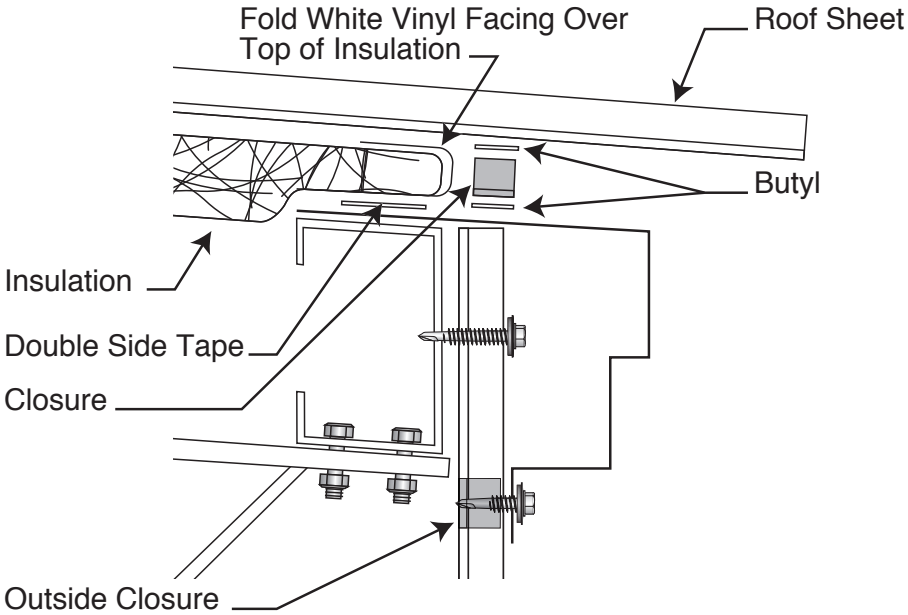

R&M STEEL COMPANY

STEEL BUILDING SYSTEMS

Recommended Basic Tool Package for 5-7 Man Erection Work Crews

This recommended list was developed by the Metal Building Manufacturers Association, Inc., as a starting point. Products manufactured by particular companies may require additional special tools. It is the erector's responsibility to insure thatthe appropriate tool is used for a given job whether or not tht tool appears on his list.

I-Hand Tools

On Hand	Quantity Recommended	Item
_____	4	Assorted Metal Files
_____	4-6	Belts w/ Bolt Bags
		Brushes
_____	1	Wire
_____	2-6	Paint, Miscellaneous
_____	4-10	"C" Clamps, (6",9", and 12")
_____	2	Caulking Guns (Open Barrel)
_____	1	Center Punch
		Chalk Line
_____	2	100'
_____	2	Chalk
_____	1	Cold Chisel
_____	2-5	Drift Pins (Open Barrel Pin)
		Hammers
_____	1	Carpenter's Straight Claw
_____	2	Ball Peen
_____	1-2	Sledge (10lb.)
_____	1-3	Rubber
_____	1	Welder's Chipping
_____	5	Hand Tool Box
_____	5-11	Hard Hats
		Knife
_____	1	Pocket
_____	2	Putty
		Pliers
_____	2	Side Cutters
_____	2	Channel-Locks
_____	3	Vice Grips, Standard
_____	5	Vice Grips, Welding Clamp
_____	1-2	Plump Bob
_____	2-3	Pocket Rivet Guns (Manual or Electric

R&M STEEL COMPANY

STEEL BUILDING SYSTEMS

Recommended Basic Tool Package for 5-7 Man Erection Work Crews

I-Hand Tools

On Hand	Quantity Recommended	Item
_____	1 ea.	Reamer, 9/16", 11/16", 13/16", 15/16"
		Saws
_____	1	Carpenter, Hand
_____	1-2	Hack, w/Blades
_____	2	Screwdriver Sets, one Flat and One Phillips
_____	1	10pc. Set Nut Drivers
		Snips
_____	5	Aviation (2 right-hand, 2 left-hand, and one straight cut)
_____	1	Large, Bulldog
_____	1	Spirit Level–4' Min.
		Square
_____	1-2	Framing
_____	1	Tri
_____	4	Staple Guns and Staples (Plier Type)
_____	2	Steel Wedges
		Tape
_____	1-5	Measuring–25'
_____	1	Measuring–100' Min.
_____	1set	Thread Chasers–Assorted Sizes (1/2" Through 1-1/4")
_____	1	Wrecking Bar
		Wrenches
_____	5	12" Adjustable
_____	2	15" Adjustable
_____	6-12	Spud With 3/4" Open End
_____	1-2	Box End Combination, Set (Size Determined by Bldg. Mfgr.) – Common Sizes 15/16" through 1-7/8"
_____	1	1/2" Drive Ratchet and Socket Set w/Various Sizes from 1/2" to 1-1/4"
_____	1	Hand Ratchet 3/4" Square Drive w/18" or 24" "Cheater Bar" and Sockets from 3/4" to 1-7/8"

R&M STEEL COMPANY

STEEL BUILDING SYSTEMS

Recommended Basic Tool Package for 5-7 Man Erection Work Crews

II-Materials Handling, Plumbing and Squaring Equipment

On Hand	Quantity Recommended	Item
_____	12-32	Cable Clamps
		Chokers–Eyes Both Ends
_____	4-6	1/2" Cable, 10'
_____	2	5/8" Cable, 12'
_____	4	1/2" Cable, 10'-14'
_____	2	Come-Alongs, 2 Ton Min
		Handlines and Temporary
		Bracing
_____	4-7	1/2" Dia. Rope, 40'-60' w/Hooks
_____	8	3/8" Dia. Min., Wire Standard
		Cable–40' Min.
_____	4	Nylon Slings, 4" Wide, 10'-12'
_____	1	Spreader Beam, 20' With
		Hook End
_____	8	Turnbuckles–3/4" Min

III-Power Tools

On Hand	Quantity Recommended	Item
_____	1	Cutting Torch w/ 100' Hose, Bottle cart, Accessories, w/Fire Extinguisher
		Drills
_____	1	Hammer w/Appropriate Size Bits
_____	2-3	Drill, 3/8" Chuck
_____	1	Drill, 1/2" Chuck
_____	1-2	Impact Wrench, 1/2" Drive, and Sockets From 3/4" through 1-7/8"
_____	1	Grinder
_____	1	Portable Generator– 2 to 5KW., w/110V DC and AC Service
_____	1	Powder Accuated Tool Kit
_____	1	Power Nibbler
_____	1	Power Shears
_____	4	Screw Guns and Sockets Sets– Per Fastener Supplier's Recommendations
_____	1	7-1/2" Heavy Duty Circular Saw w/Wood and Metal Abrasive Blade
_____	1	Welding Unit w/50' Ground and 75' Leads

R&M STEEL COMPANY

STEEL BUILDING SYSTEMS

Recommended Basic Tool Package for 5-7 Man Erection Work Crews

IV-Miscellaneous

On Hand	Quantity Recommended	Item
		Brooms
_____	1-3	Push Type
_____	2-4	Warehouse
_____	*	Buckets
_____	1	Dolly
		Extension Cords
_____	1	#10-3, 2/4-Way Box, 100' Min.
_____	2-3	#12-3, 50'
_____	1	Ground Fault Interrupter
_____	*	Fire Extinguishers
_____	*	First Aid Kits
_____	*	5 Gal. Water Cooler and Cups
_____	1	Flashlight
		Gloves
_____	10 prs.	Work
_____	2 prs.	Welding
_____	1-2	5 Gal. Gasonline can w/Safe spout
		Ladders
_____	2	Extension, 20' to 40'
_____	2-3	Step, 6' to 8'
_____	1	Level Rod
_____	1-2	Mops (Water)
_____	2	Oil Can
_____	3	Rolls #9 Wire
_____	4	Safety Goggles
_____	2	Saw Horses
		Scaffolding-Rolling Towers
_____	1	Shovel
_____	*	Sponges and Shop Rags
_____	1	Transit
_____	1	Welding Hood with Spare Lens

* – As required

ERECTION CHECK LIST

Yes	No	**Pre—Erection Considerations**
☐	☐	Have you read and become familiar with the erection manual?
☐	☐	Have you checked and complied with all safety requirements applicable to your building and local conditions?
☐	☐	Are sufficient and adequate tools on hand to properly erect the building?
☐	☐	Is building site clear and free of overhead and underground obstructions?
☐	☐	Is the site accessible by heavy wheeled vehicles? Is electrical power available?
☐	☐	Have you received and become familiar with your erection drawings and tally sheets?

Yes	No	**Foundation**
☐	☐	Does your foundation conform to UBC load recommendation for foundation design?
☐	☐	Are anchor bolts of proper size?
☐	☐	Have anchor bolt locations been checked before and after pouring foundation? (Anchor bolts are located 4" or 12" from length steel line and 3" or 4" from width steel line. Please call if doubt exists.)
☐	☐	Does your building have overhead doors: If so, have provisions been made for them in your foundation design?
☐	☐	Has foundation been checked for level?
☐	☐	Has concrete had sufficient time to "cure"?

Yes	No	**Unloading**
☐	☐	Were materials checked against tally sheet as they were unloaded?
☐	☐	If there was damage or shortage of material, was a proper notation made to the shipping manifest?
☐	☐	Was blocking used to protect structurals and sheeting?
☐	☐	Were materials spot unloaded to minimize rehandling?
☐	☐	If building materials are stored, have proper storage provisions been met?

Yes	No	**Framing Erection**
☐	☐	Has base angle been installed properly?
☐	☐	Was maximum amount of sub-assembly work done on ground?
☐	☐	Have all connections been made including girts, purlins and flange braces?
☐	☐	Have all bolts been installed and properly torqued? Have all anchor bolts been tightened?
☐	☐	Were high strength bolts used where specified in erection drawings?
☐	☐	Were X—brace cables installed correctly?
☐	☐	Is braced bay(s) plumb and square?

Yes	No	**Endwall Assembly**
☐	☐	Were high strength bolts used at proper locations?
☐	☐	Are bolts secure and properly torqued?
☐	☐	Are purlins and girts properly installed and aligned?
☐	☐	Were X—brace cables installed correctly?
☐	☐	Are braced span(s) plumb and square?
☐	☐	Was framework checked before sheeting began?

R&M Steel Company

Box 580
Caldwell, ID
1-208-454-1800

Outside Corner

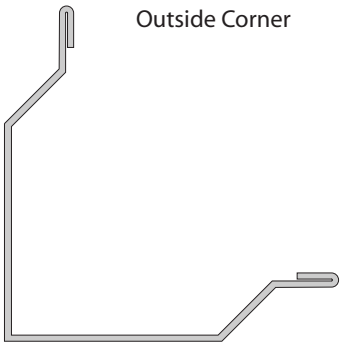

S-11

Intside Corner

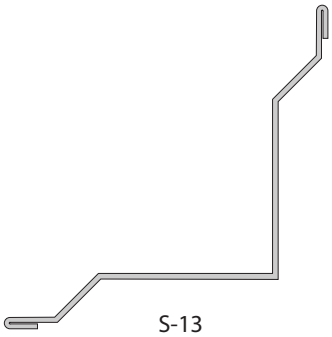

S-13

Rake Fascia

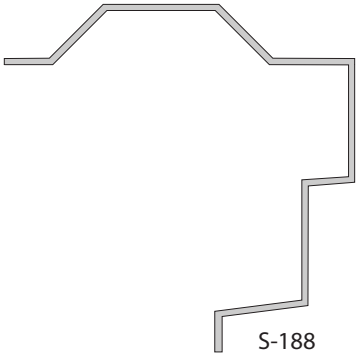

S-188

Eave Fascia

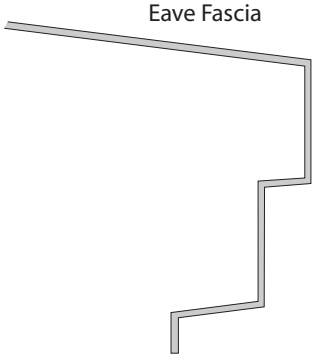

S-17

Panel Cap

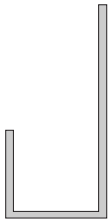

S-58

Door Header

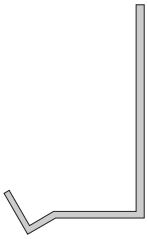

S-580B

"L" Metal

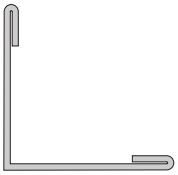

L 3 X 3 FLASHING

Die Formed Ridge Cap

PROPER STORAGE FOR GALVANIZED AND PRE—PAINTED STEEL PANELS

The attractive appearance of metal roofing and siding may be dulled or marred if moisture is trapped between the panels and is allowed to remain there. It is, therefore, necessary that a few simple precautions be taken to prevent this from happening and insure that the panels retain their attractive appearance.

If moisture is permitted to enter a bundle it should be broken open, drained and the panels separated to allow for complete drying. To prevent this from happening, observe the following:

1. Inside storage is most desirable and should be used whenever practical. Jobsite storage time should be minimized.

2. When stored outdoors, bundles should be placed high enough off the ground to allow sufficient air circulation beneath each bundle and prevent rising water from making contact with the panels.

3. Slightly elevate one end of the bundle to promote good drainage. Prevent moisture from entering the bundle by covering it with a tarpaulin, making provision for good ventilation between draped edges of tarpaulin and the ground. Do not store covered with plastic.

4. Prolonged storage of panels in a bundle is not recommended. If conditions do not immediately permit panels to be erected, extra care must be taken to protect panels from white rust or water stain.

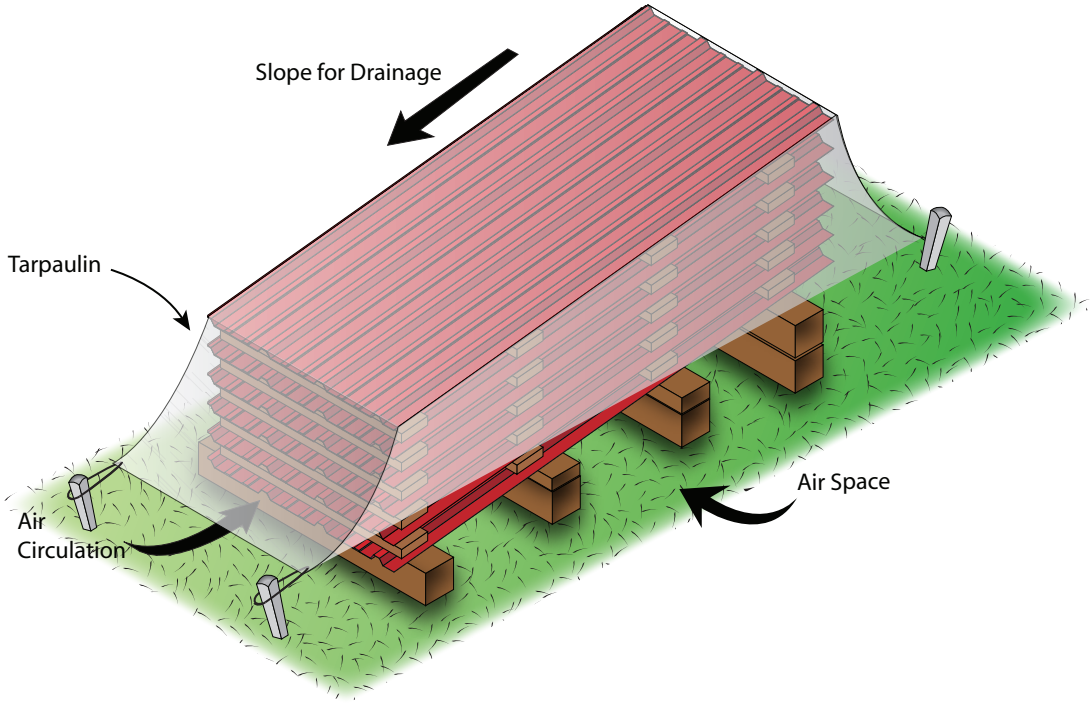

R & M STEEL COMPANY

INSTALLER OF FACED METAL BUILDING INSULATION

Please read specifications carefully. We cannot guarantee this product for installation in temperatures below 20ºF. The facing becomes brittle and may crack during installation. If you have any questions, please feel free to call.

R&M STEEL COMPANY

R&M Steel Company

Box 580
Caldwell, ID
1-208-454-1800

MATERIAL SAFETY DATA SHEET

SECTION 1. PRODUCT IDENTIFICATION

Manufacturer:	R & M Steel Company
Address:	P. 0. Box 580, Caldwell, Idaho 83606
Telephone Number:	208 / 454-1800
Identity:	Carbon & Alloy Steel

SECTION 2. HAZARDOUS INGREDIENTS

Chemical Name	OSHA PEL (mg/m3)	ACGIH TLV (mgjm3)	% By Total Weight
Iron	10	5	94 - 98
Chromium	1.0	0.5	0 - 1.2
Nickel	1.0	0.1	0 - 1.0
Manganese	5	1.0	0.3 - 1.6
Molybdenum	5	5	0 - 0.35
Copper	0.1	0.2	0.1 - 1.0
Silicon	None	10	0 - 0.7
Carbon	None	None	0.05-1.0
Cadmium	0.1	0.05	0.1

SECTION 3. PHYSICAL DATA

Appearance:	Odorless Solid	Odor:	None
Specific Gravity:	7/8	Melting Point:	2800 F.
Boiling Point:	N/A	Vapor Pressure:	N/A
Evaporation Rate:	N/A	Solubility In H20:	N/A
Vapor Density:	N/A		

SECTION 4. FIRE AND EXPLOSION HAZARD DATA

Flash Point:	None
Flammable Limits:	LEL N/A UEL N/A
Extinguishing Media:	No Fire Or Explosion Hazard
Special Fire Fighting Procedures:	N/A
Unusual Fire And Explosion Hazards:	N/A

MSDS-1

MATERIAL SAFETY DATA SHEET

SECTION 5. REACTIVITY DATA

Stability: Stable

Incompatibility: None

Hazardous Decompression Products: Metal Fumes And Certain Noxious Gases May Be Produced During Burning Or Welding

Hazardous Polymerization: Will Not Occur

SECTION 6. HEALTH HAZARD DATA

Primary Routes Of Entry: Inhalation, Ingestion

Health Hazards: Prolonged, Repeated Exposure To Fumes Or Dust Generated During Cutting, Welding, Or Grinding May Cause Impairment Of Lung Function, Pneumonitis, "Metal Fume Fever".

Signs And Symptoms Of Exposure: Irritation Of the Nose, Throat Or Eyes; Cough, Headache, Nausea, Fever.

Medical Conditions Generally Aggravated By Exposure: Dermatitis, Pulmonary Disease, Speech Disorders.

Emergency And First Aid Procedures: In Case Of Overexposure, Move Person

From Contaminated Area To Fresh Air. If Eyes Are Irritated, Flush With Water. Seek Medical Aid If Necessary.

SECTION 7. PRECAUTIONS FOR SAFE HANDLING AND USE

Steps To Be Taken In Case Material Is Released Or Spilled: N/A

Waste Disposal Method: N/A

Precautions To Be Taken In Handling And Storing: N/A

Other Precautions: N/A

SECTION 8. CONTROL MEASURES

Respiratory Protection: Use NIOSH — Approved Dust/Fume Respirator If Contaminant Level Exceeds The PEL Or TLV.

Ventilation: Local Exhaust — Allow For Adequate Ventilation Mechanical — When Required

Protective Gloves: Use Gloves When Cutting, Welding Or Grinding. Eye Protection: Use Face Shield And Appropriate Eye Protection When Cutting, Welding, Or Grinding.

Other Protective Clothing Or Equipment: Use Welders Apron When Welding. Work/Hygienic Practices: Remove Combustibles From Area When Cutting Or Welding.

MSDS-2

MATERIAL SAFETY DATA SHEET

SECTION 9. ADDITIONAL OR MISCELLANEOUS INFORMATION

Nonmetallic coatings may be applied (often at the customer's request) to the surface of steel products. These are usually classified as protective coatings. The typical nonmetallic coatings are as follows:

Steel Product Form	Possible Coatings Applied
Structural	Paints, Galvanized Coating

The possible presence of these coatings on steel products should be recognized and considered when evaluating potential employee health hazards and exposures during welding or other dust/fume generating activities.

This material safety data sheet contains confidential proprietary information. Its contents are not to be disclosed to the general public or to competitive manufacturers. Information contained herein is provided in good faith as authoritative and valid; however, no warranties, either expressed or implied, can be made concerning the accuracy of completeness of the information with regard to all possible conditions of use or handling.

MSDS-3

MATERIAL SAFETY DATA SHEET

SECTION I - IDENTIFICATION

Product Name :	5225	H. M. I . S. Ratings:	H	F	R	P
Product Code :	B5225		0	0	0	A
Description :	Metal Building Tape Sealant					
Hazardous Classification:	Non Regulated					
Proper Shipping Name:	Not Applicable					
Shipping Description:	Not Required					

SECTION II - MANUFACTURER

Manufacturer's Name:	Schnee-Morehead, Inc.	
Street Address :	111 N. Nursery Rd., Irving, Texas	
Information Phone :	214-438-9111	Emergency Phone: 800-424-9300
Date Prepared :	February 8, 1993	Supersedes Date: December 16, 1991
Name Of Preparer :	Randy Martin	

SECTION III — HAZARDOUS INGREDIENTS

HAZARDOUS COMPONENTS	CAS NUMBER	OSHA PEL	ACGIH TLV	OTHER LIMITS	PERCENT

This Product Does Not Contain Hazardous Ingredients As Defined In 29 CFR1910.1200

SECTION IV - PHYSICAL PROPERTIES

Specific Gravity	(H20=1): 1.42	Boiling Point : N/A
Volatile	(% Volume): 0.00%	Melt/Freeze Pt: N/A
Solubility In Water :	Insoluble	Vapor Density : N/A
Evaporation Rate (Buac=1) :	N/A	Vapor Pressure: N/A
Volatile Organic Content :	N/A	
Appearance/Odor :	Color Of Pigment, Pliable Rubbery Sealant - Odorless	

SECTION V - FIRE AND EXPLOSION HAZARD DATA

Flash Point: N/A Method Used: N/A
Flammable Limits In Air By Volume - Lower: N/A Upper: N/A

Extinguishing Media: Dry Chemical, Carbon Dioxide, Foam And Water

Special Firefighting Procedures: None Known

MSDS-4

UNUSUAL FIRE AND EXPLOSION HAZARD:
None known

SECTION VI - REACTIVITY DATA

STABILITY: Stable
CONDITIONS TO AVOID:
None known

INCOMPATIBILITY (MATERIALS TO AVOID):
Strong oxidizing agents

HAZARDOUS DECOMPOS ITION OR BY - PRODUCTS:
Thermal decomposition may form carbon dioxide, carbon monoxide, hydrogen chloride and various hydrocarbon fumes

HAZARDOUS POLYMERIZATION:
WILL not occur

CONDITIONS TO AVOID:
None known

SECTION VII - HEALTH HAZARD DATA

ROUTE(S) OF ENTRY:
INHALATION?: No SKIN?: No INGESTION?: Not Likely

HEALTH HAZARDS (ACUTE AND CHRONIC):
None known

CARCINOGENICITY:
NTP?: No IARC MONOGRAPHS?: No OSHA REGULATED?: No

SIGNS AND SYMPTOMS OF EXPOSURE:
At present, there are no known signs and/or symptoms caused by exposure to this product.

MSDS-5

MEDICAL CONDITIONS GENERALLY AGGRAVATED BY EXPOSURE:

There are no known medical conditions which are aggravated by exposure.

EMERGENCY AND FIRST AID PROCEDURES:

Eye contact- Flush with warm water for 15 minutes. If irritation persists, contact a physician.
Skin Contact- Wash contaminated area with soap and water for 15 minutes.
Ingestion- DO NOT INDUCE VOMITING, contact a physician

SECTION VIII - PRECAUTIONS FOR SAFE HANDLING AND USE

STEPS TO BE TAKEN IN CASE MATERIAL IS SPILLED OR RELEASED:

Eliminate alt sources of ignition.

WASTE DISPOSAL METHOD:

Incineration or burial; consult and follow alt locaL, state and federal compliance regulations for your area.

PRECAUTIONS TO BE TAKEN IN HANDLING AND STORAGE:

Rotate stock. Store under 80 F. Do not stack cartons on ends.

SECTION IX - CONTROL MEASURES

RESPIRATORY PROTECTION:

Not required with normal application. If needed, use an approved OSHA/NIOSH cartridge respirator.

VENTILATION:
LOCAL EXHAUST: N/A SPECIAL: N/A
MECHANICAL: N/A OTHER: N/A
GLOVES: Chemical resistant, Impervious EYE PROTECTION: Safety glasses
OTHER PROTECTIVE CLOTHING OR EQUIPMENT: N/A
WORK/HYGIENIC PRACTICES:

Always wash hands after working with this material; Use good hygiene practices.

SECTION X - DISCLAIMER

This document may be used to comply with OSHA's Hazardous Communication Standard, 29 CFR 1910.1200.

The opinions expressed herein are those of qualified experts within Schnee Morehead, Inc. We believe that the information contained herein is current as of the date of this Material Safety Data Sheet. Since the use of this information and the use of this product are not within the control of Schnee Morehead, Inc., it is the user's obligation to determine the conditions of safe use of this product.

N/A = Not AppLicable, N.A. = Not Available, N.D. = Not Determined, N/E = Not Established, UNK = Unknown

MSDS-6

Dear Valued Customer,

Just this short note to let you know that we sincerely appreciate the business that you have given us recently. It's always a pleasure to serve you. Valued customers like you deserve a special "thank you." We are dedicated to meeting your needs. Please call if we can be of help to you in the future. If you are satisfied, please tell others. If you are not satisfied, please tell us - we want the chance to correct any mistakes. If you have any comments or questions about your building, please contact us. If you have any comments or suggestions for the improvement of this manual, call or write us. We want to provide you with the best possible Installation Instruction Manual. Everyone at R&M Steel shares a common goal; 100% customer satisfaction. It is the "whatever it takes" commitment to every customer that explains, sustains and drives our company's growth. We are proud to have a happy customer!

Call R&M Steel Company for your next Pre-Engineered Metal Building Quote!
We look foward to working with you!

P.S. Please note our new facility address, phone and fax numbers.
Phone: (208) 454-1800
Fax: (208) 454-1801
Toll Free Phone: 1-866-454-1800
Toll Free Fax: 1-866-454-1801
www.rmsteel.com
www.aviationbuildingsystem.com

Thank you,
R&M Steel Company

R&M STEEL COMPANY

Pre-Engineered Steel Building Systems
Steel Building Excellence Since 1969